由 Autodesk 教育版产品制作

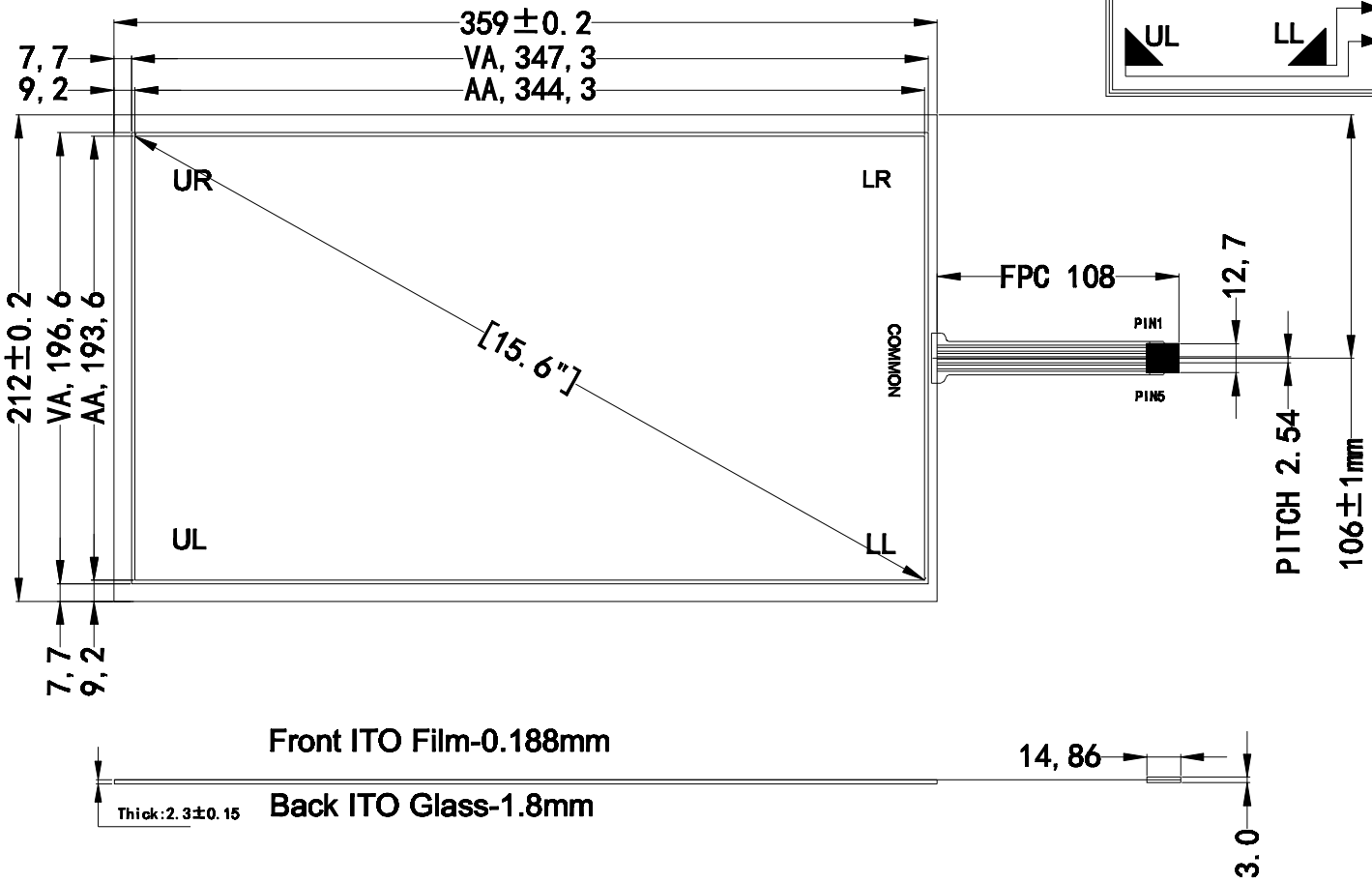

OUT	PIN
UL	PIN1
UR	PIN2
COM MON	PIN3
LR	PIN4
LL	PIN5

Notes:
1.Type:Film to Glass
2.Operating Voltage:≤10v
3.Operation Temperature:-20℃~65℃
Storage Temperature:-30℃~70℃
4.Life Time:1.000.000 times
5.Connect Material:FPC
6.Response Time:≤10ms
7.Linearity:≤1.5%
8.Transmittance:≥75%
9.Surface Hardness≥3H(pencil)
10.Operation force:60g~150g

11.Resistance:50Ω<PIN1,PIN2<250Ω
50Ω<PIN2,PIN4<250Ω
50Ω<PIN4,PIN5<250Ω
50Ω<PIN5,PIN1<250Ω

TOLERANCES (UNLESS OTHERWISE STATED)	
DECIMALS	ANGLES ±0.5°
>2000MM	±2.00MM
1600< X ≤2000M	±1.20MM
1200< X ≤1600MM	±0.80MM
800< X ≤1200MM	±0.50MM
400< X ≤800MM	±0.40MM
120< X ≤400MM	±0.30MM
30< X ≤120MM	±0.20MM
<30MM	±0.10MM

GreenTouch Technology Co.,Ltd

Model No.:	GT-5W-15.6A-1	Size	15.6"	Ratio	16:9
Structure	G+F	Unit	mm	Scale	1:1
Design	李艳	Date	2015.8.5	Page	1/1
Check	付作书	Date	2015.8.5	Version	A0
Release	汪陈	Date	2015.8.5		

由 Autodesk 教育版产品制作
由 Autodesk 教育版产品制作
由 Autodesk 教育版产品制作