WTAU™ 微特

起 重 安 全 保 护 专 家

WTL-A200 型

Model WTL-A200

力矩限制器

Torque Limiter

使用说明书

Manual

微特技术有限公司

WEITE TECHNOLOGIES CO.,LTD.

国家级高新企业 国际质量体系认证 欧共体CE认证 中国船级社认证 特检合格 防爆认证 起重机械改造A级

目录

阅读、使用须知

在安装、使用本套力矩限制器之前，请仔细阅读本使用说明书，充分理解各章节内容的含义，正确进行相关操作。

本说明书的内容如有更改，恕不另行通知。宜昌微特电子设备有限责任公司不对本资料进行任何形式的担保，包括但不限于商业性的或为了某种特殊目的而作的含蓄说明。

Prior to installation and operation, please read the Manual thoroughly to get sufficient understanding about the content in each section so as to ensure correct processing and operating.

WTAU is not obliged to notify users of its products of any changes to the content of the Manual. It does not offer any guarantees for the materials in the Manual in any means whatsoever as well, including but not limited to commercial guarantees or implicit directions for special purposes.

如在使用过程中有任何疑问可直接电话与我公司技术支持人员沟通，由于说明书可能存在的印刷或排版错误而引起的不良后果本公司不承担责任。

禁止未经书面许可而将本说明书进行复制、传播。

Call our technical support department for help if there is any problem in operation. However, WTAU is not liable for any negative consequences caused by errors in the Manual due to mistakes made in printing or typesetting.

Reproduction and dissemination of the Manual without our written permission are prohibited

一、力矩限制器使用安全须知

在安装、使用本套力矩限制器之前，请仔细阅读本使用说明书，充分理解各章节内容的含义。力矩限制器作为预防起重机超载作业的安全保护装置，只有正确的安装、设置、操作使用才能有效的发挥作用；否则就会使力矩限制器发生故障而失去保护作用，致使起重机的安全得不到保障。

I. Safety Tips for Torque Limiter Operation

Prior to installation and operation, please read the Manual thoroughly to get sufficient understanding about the content in each section. Torque limiter, as a kind of safety device, is designed to protect the crane from overloading. It functions effectively only when installed, set and operated correctly. Otherwise, it may go wrong and fail to provide protection and safety insurance

to the crane.

①开始起重机操作之前，请确保力矩限制器的电源接通，并按本使用说明书检查相关显示，确认力矩限制器工作正常后方可操作。

②只有将力矩限制器的各种参数与起重机的实际工作状态（如额重、倍率、主钩副钩选择）设置完全一致力矩限制器才能正确发挥安全保护作用。

③在操作起重机时，应注意观察力矩限制器的各项数据显示，以确保在起重机性能范围内工作。

④当超载发生时，力矩限制器将发出声光报警并输出控制信号，结合起重机的外围控制电路切断起重机向危险方向的动作（如起升吊钩）。此时应首先减轻起吊重物或使起重机向安全方向动作（如放下吊钩）直至力矩限制器报警停止为止，然后再进行起重机的其它操作。

1. Prior to starting up the crane, please make sure that torque limiter is connected to the power. Check the instrument as specified in the Manual and start operation only when the normal function of the torque limiter is confirmed.

2. The torque limiter offers protection only when the configuration of the parameters is in alignment with the actual working conditions of the crane (for instance, weight, range, and the option for main/auxiliary hook).

3. When operating the crane, pay attention to the data display of the torque limiter to ensure that the crane is working within its range of performance.

4. In case of overloading, the sound-light alarm of the torque limiter will be triggered and signals will be sent out. Together with the Peripheral Control Circuit of the crane, it stops the crane from moving towards dangerous directions (for instance, lifting the hook). Operators should first and foremost reduce the weight or move the crane towards safety directions (for instance, letting down the hook) until the alarm stops. Then, proceed to further operations of the crane.

二、WTL-A（200）型力矩限制器主要技术参数

1：测量范围

测量范围：0 ～ +999.9T（可调）

分辨力：0.1T

2：测量精度

综合精度：±5%（F.S.）

3：使用条件

工作电压：AC220V ± 5%

环境温度：-20℃ -- +60℃

相对湿度：90%(20℃)

动作误差：<±3%（F.S.）

继电器触点容量：220VAC 5A

4：人工预置重量、角度、臂长。

5：报警控制功能

当起重力矩达到相应工况下额定起重力矩的 90%以上时，可以发出清楚、明显的声光预警信号（灯光为黄色）；

当起重力矩达到额定起重力矩的 100%以上时，可以发出清楚、明显的声光报警信号（灯光为红色），且只有在降低到额定工作能力的 100%以内时报警才会停止；

当起重力矩达到额定起重力矩的 110%时，立即输出超载控制信号，配合起重机控制电路停止向危险方向（如起升、增幅）的动作，但可以向安全方向（如下降）动作。

配合起重机控制电路停止上升方向的动作，但可以向下降方向动作。

II. Technical Specifications of Model WTL-A (200) Torque Limiter

1. Measurement Ranger

   Measure range: 0 ～ +999.9T (adjustable)

   Resolving ability: 0.1T

2. Measurement Accuracy

   Combined accuracy: ±5%（F.S.）

3. Working Conditions

   Electric voltage: AC220V ± 5%

   Temperature: -20℃ -- +60℃

Relative moisture: 90%(20℃)

Action error: <±3%（F.S.）

Relay contact capacity: 220VAC 5A

4. Manual presetting of weight, angle and arm length
5. Alarm Control Function

When the torque reaches 90% of the rated load moment, it gives loud and clear sound and light alarm signal (amber light)

When the torque reaches 100% of the rated load moment, it gives loud and clear sound and light alarm signal (red light). The alarm stops only when the torque is lower than 100% of the rated load moment.

When the torque reaches 110% of the rated load moment, it sends out overload control signal and working together with the control circuit to stop the crane from moving towards dangerous directions (for instance, lifting, increasing radius / range). Movements toward safety directions are allowed (for instance, lowering).

Working together with the control circuit of the crane to stop upward movement but allow downward movement.

三、WTL-A（200）型力矩限制器构成

WTL-A（200）型力矩限制器采用模块化结构，由重量传感器、角度/测长传感器、信号传输电缆、微电脑主机（含电源、显示、信号处理、控制输出）等部分组成。

液晶显示屏机械数据：

参数	标准值	单位
点尺寸	0.40 (W) 0.40(H)	mm
点距	0.45(W) 0.45(H)	mm
可视区	114.0(W) 64.0(H)	mm

模块尺寸（LED 背光）	144.0(W) x104.0(H)　15.0 max (T)	mm

III. Composition of Model WTL-A (200) Torque Limiter

Module design is adopted in Model WTL-A (200) Torque Limiter, which is made up of weight sensor, angle & range sensor, signal transmission cable, microcomputer (power, monitor, signal processor, input/output).

LCD monitor displays the technical parameters:

Parameter	Reference values	unit
Dot size	0.40 (W)　0.40(H)	mm
Dot pitch	0.45(W)　0.45(H)	mm
View area	114.0(W)　64.0(H)	mm
Module Size (LED panel)	144.0(W) x104.0(H)　15.0 max (T)	mm

Appearance and installation dimensions of Model WTL-A (200) Torque Limiter

WTL-A（200）型力矩限制器仪表外观及安装尺寸:

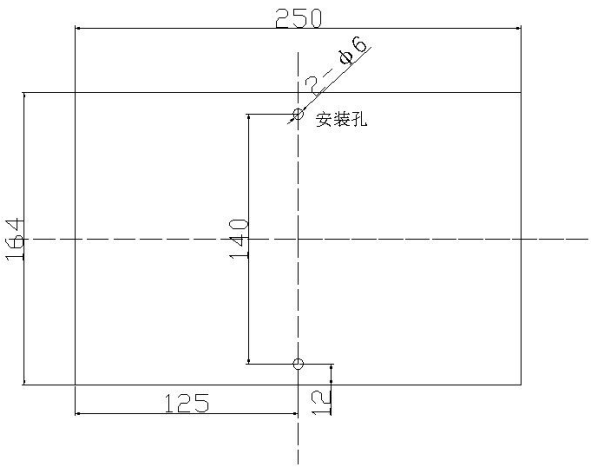

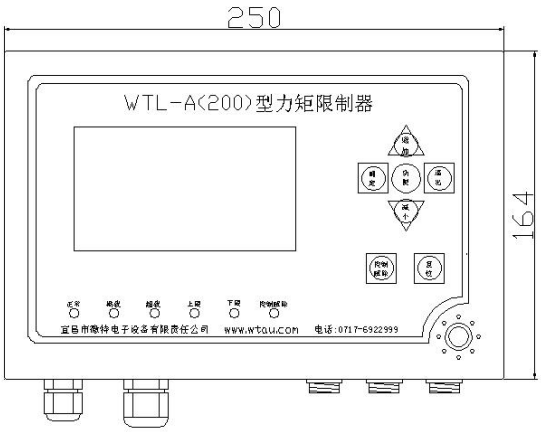

在仪表的底部采两个φ6 固定孔安装仪表。

Install the machine via two fixing holes at the back.

WTL-A（200）型力矩限制器仪表的组成:

Composition of Model WTL-A (200) Torque Limiter

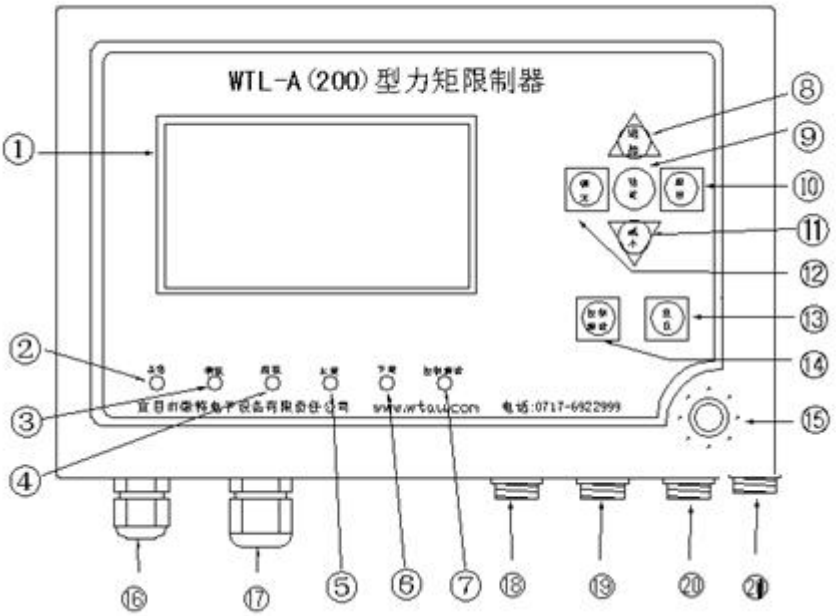

序号		
①		
②		
③		
④		
⑤		）
⑥		）
⑦		
⑧	增加	数字增加 1、菜单切换到上一项
⑨	功能	进入功能菜单、输入数字时移动光标
⑩	退出	放弃修改、返回上级菜单
⑪	减小	数字减小 1、菜单切换到下一项
⑫	确定	确定（主菜单时可进入工况切换）
⑬	复位	仪表 MCU 工作复位
⑭	控制解除	控制解除状态切换
⑮	蜂鸣器	仪表内部在此处安装有蜂鸣器
⑯	PG9 锁头	电源线进线锁头
⑰	PG13.5 锁头	控制线出线锁头
⑱	六芯航插	主钩重量传感器航插（1：V+、2：IN+、4：IN-、5：G

		ＮＤ）
⑲	五芯航插	副钩重量传感器航插（1：V+、2：IN+、4：IN-、5：ＧＮＤ）
⑳	四芯航插	测长传感器航插（１：V+、2：IN、3：ＧＮＤ）
21	三芯航插	角度传感器航插（１：V+、2：IN、3：ＧＮＤ）

No.	Part Name	Functions
①	LCD Monitor	Display operating conditions and data
②	Normal Indicator	Light up when the instruments working properly (green)
③	Full-load Indicator	Light up when load reaches preset maximum value (amber)
④	Over-load Indicator	Light up when weight reaches preset over-load value (read)
⑤	Maximum Indicator	Light up when the radius is smaller than the preset minimum value (red)
⑥	Minimum Indicator	Light up when the radius is bigger than the preset maximum value (red)
⑦	Control-Release Indicator	Light up when in control-release condition (amber)
⑧	增加	Press “UP” to increase the number by one, switch to the last menu
⑨	功能	Enter “Function” menu, move the cursor when inputting numbers
⑩	退出	Cancel changes and back to previous menu

⑪	减小	Press “DOWN” to decrease the number by one, switch to the next menu
⑫	确定	Press “OK” to select or confirm (can switch working conditions when in main menu)
⑬	复位	Reset the instrument MCU
⑭	控制解除	Switch between control and release
⑮	Buzzer	A buzzer is embedded here inside the instrument
⑯	PG9 Locking Screw	Locking screw of the power cord IN
⑰	PG13.5 Locking Screw	Locking screw of the pilot control line OUT
⑱	6-pin Aviation Plug	Aviation plug for the weight sensor of the main hook (1: V+; 2: IN+; 4: IN-; 5: GND)
⑲	5-pin Aviation Plug	Aviation plug for the weight sensor of the auxiliary hook (1: V+; 2: IN+; 4: IN-; 5: GND)
⑳	4-pin Aviation Plug	Aviation plug for the length sensor (1 : V+: 2: IN; 3: GND)
㉑	3-pin Aviation Plug	Aviation plug for the angle sensor (1 : V+; 2: IN; 3: GND)

四、WTL-A（200）型力矩限制器的安装

1、仪表安装

本仪表为壁挂式安装，可固定在司机室墙壁上，也可通过加工安装板安装于合适位置，我公司标配中不含安装板，用户可根据需要自行加工。安装方法如下：

第一步、将仪表右侧螺丝拧下，打开机盖；

第二步、仪表底部有 2 个 φ6 安装孔，用螺丝将仪表固定在墙壁或安装板上即可。

IV. Installation of Model WTL-A (200) Torque Limiter

1. Installation of the display instruments

The instruments can be fixed either to the wall of the driver cab or any other proper locations by fixing board. Fixing board is not included in our standard bundle. You can make one by yourself if needed. The procedure of installation is as follows:

Step one: unscrew the screw on the right side of the instrument and then open the lid.

Step two: fix the instrument on the wall or fixing board by tighten the screws in the fixing holes at the back of the instrument.

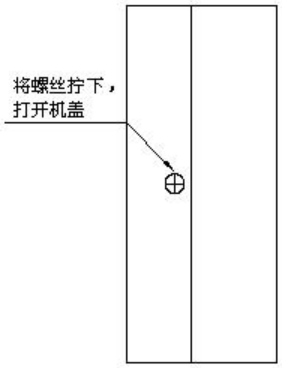

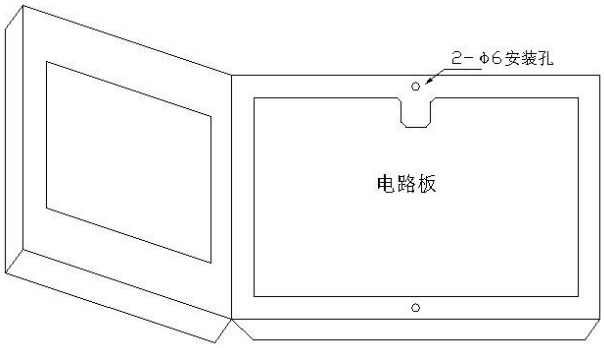

2、角度/测长仪的安装：

角度/测长仪由角度仪和测长仪组成，如下图：

2. Installation of the Angle & Length Sensor

The Angle & Length Sensor is composed of an angle measuring instrument and a length measuring instrument, as illustrated in the following picture.

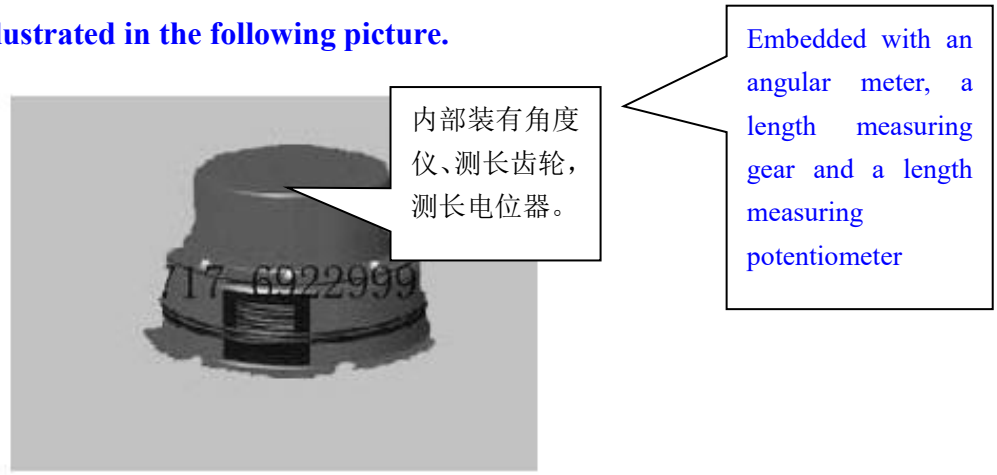

侧长/角度仪

测长仪拉线，安装时拉线头固定在臂杆顶部，与臂杆平行。

Stay wire of the length measuring instrument. The head of the wire should be fixed to the top of the arm extension, making it parallel to the arm

① 角度/测长仪安装在汽车吊臂的基本臂中部。

① Angle& Length Sensor is fixed in the middle of the main arm of the truck crane.

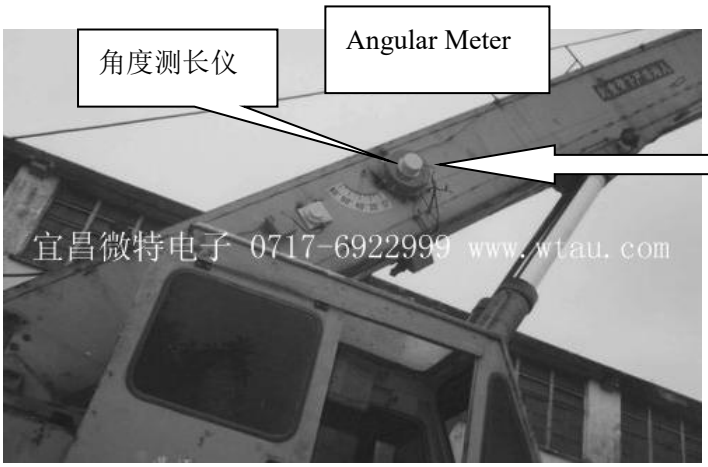

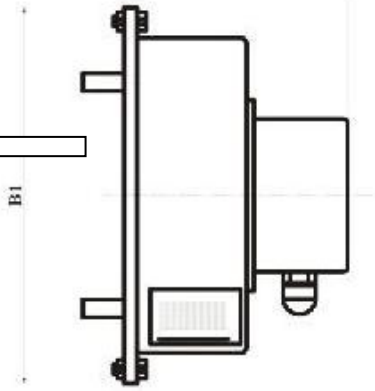

②安装顺序:

放平（水平）吊臂，确定好左右桩，连接好仪表，确定仪表角度显示在 0.1 度时，将角度/测长仪焊牢（出线方向向前），将测长拉线固定在第一节臂（最小臂）顶端。

③安装的技术要求：

保证角度显示与实际角度一致（误差±0.1 度），伸缩臂时拉线无阻碍，且能完全收回。

④安装注意事项:

焊接牢固、方向正确

② Installation procedures:

Level (horizontal) the arm, fix left and right piles, connect the display instruments, then fix the Angle & Length Sensor firmly onto the arm when the marking on the instrument is pointing at 0.1 (with the drum outlet pointing to

the front), fix the head of the pull wire to the top of the first (smallest) arm extension.

③ Technical requirements of installation:

Make sure that the angle displayed is in accordance with the actual angle (permissible error ±0.1), and that the wire does not disturb the stretching and drawing of the arm and can be drew back completely.

④ Caution:

The sensor should be fixed firmly, pointing to the right direction.

3、重量传感器安装

三滑轮传感器的安装位置

三滑轮传感器安装在起重绳上，可通过角铁焊接在臂架上或者通过拉杆使三滑轮传感器悬浮在起重绳上。起重绳受力后，会对装有传感器的中轮产生一股张力，从而使传感器检测出当前的起重量。

3. Installation of Weight Sensor

Location of the 3-pulley sensor

The 3-pulley sensor is installed on the hoisting line. It can be fixed to the boom / jib by angle iron or clung to the hoisting line via tie pole. When the hoisting line receives strength, it will press against the pulley in the center so that the sensor can test the weight of the load.

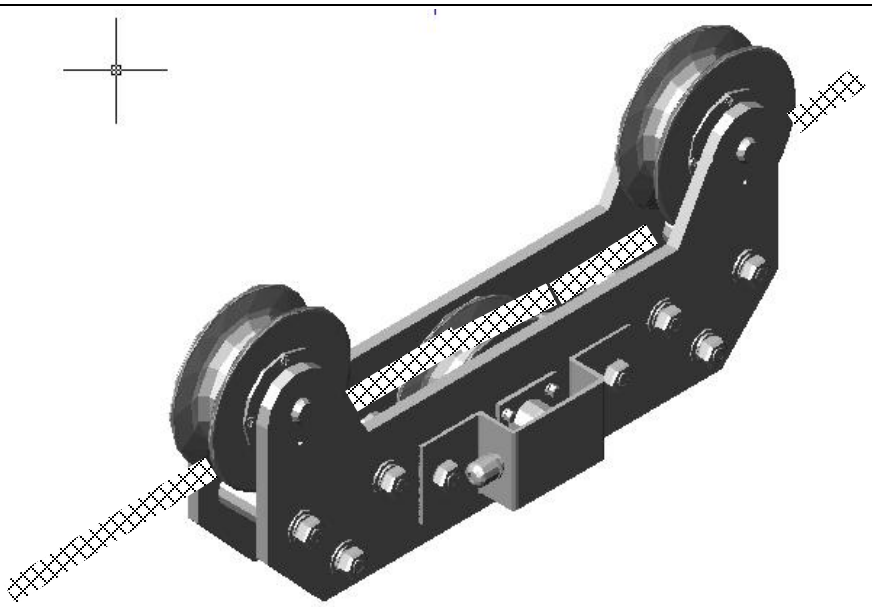

三滑轮传感器的组成和受力区域

Composition and strength-receiving area of the 3-pulley sensor

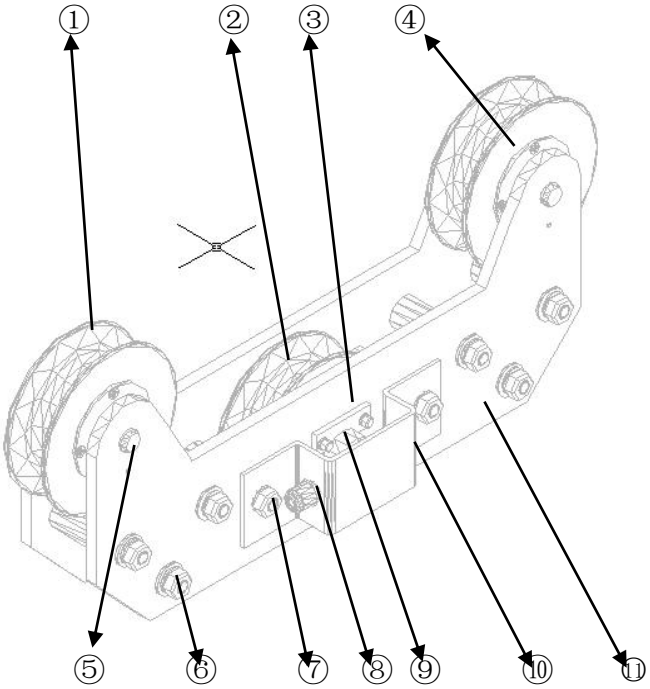

附表（一）

类别	序号	名称	数量
滑轮	①	导向轮	1

	②	中滑轮	1
	④	导向轮	1
重量传感器	⑨	微型轴销传感器	1
机械加工套件	③	轴销传感器卡板	1
	⑤	导向轮轴销	2
	⑥	安装板螺栓	
	⑦	传感器挡板螺栓	2
	⑧	传感器接线锁头	1
	⑩	传感器挡板	1
	⑪	安装板	2

Table (1)

Item	No.	Name	Quantity
Pulley	①	Guide Pulley	1
	②	Central Pulley	1
	④	Guide Pulley	1
Weight Sensor	⑨	Micro-dowel Sensor	1
Mechanical Processing Kits	③	Dowel Sensor Spacer	1
	⑤	Guide Pulley Dowel	2
	⑥	Fixing Board Screw Bolt	
	⑦	Sensor Spacer Screw Bolt	2
	⑧	Sensor Connection Locking Screw	1
	⑩	Sensor Baffle	1
	⑪	Fixing Board	2

三滑轮传感器的受力区域：中滑轮为三滑轮传感器的受力点。
三滑轮传感器的安装：

The strength-receiving area of 3-pulley Sensor: the central pulley bears the pressure.
Installation of the 3-pulley Sensor:

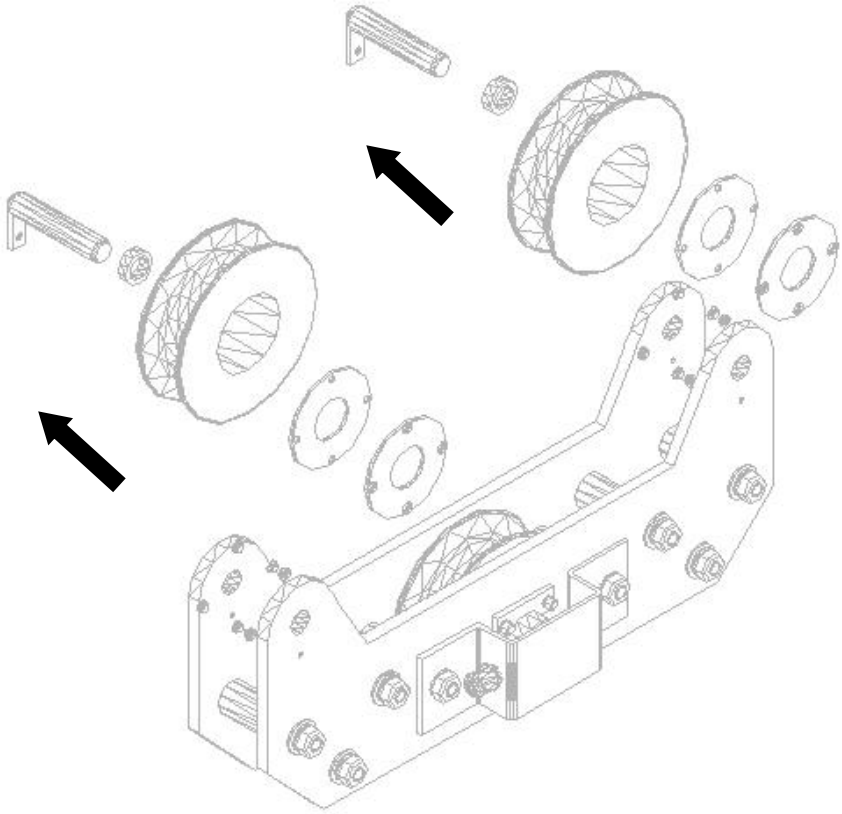

①
将两个导向轮拆下
Dismount the two Guide Pulleys

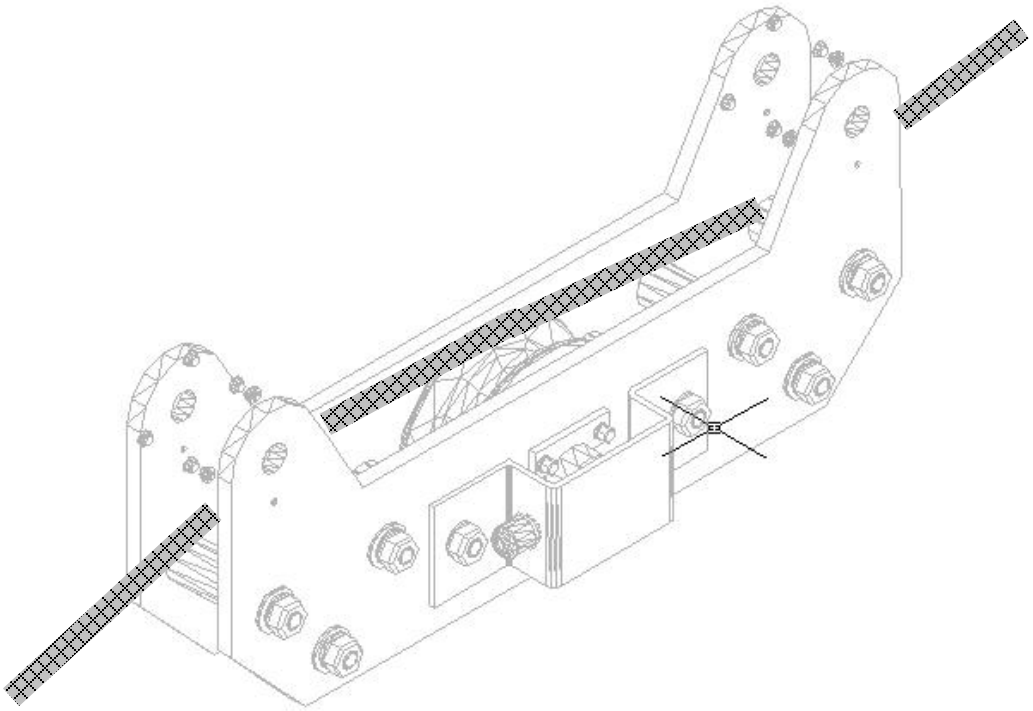

②
将钢丝绳放入中间滑轮上
Place the steel wire on the Central Pulley

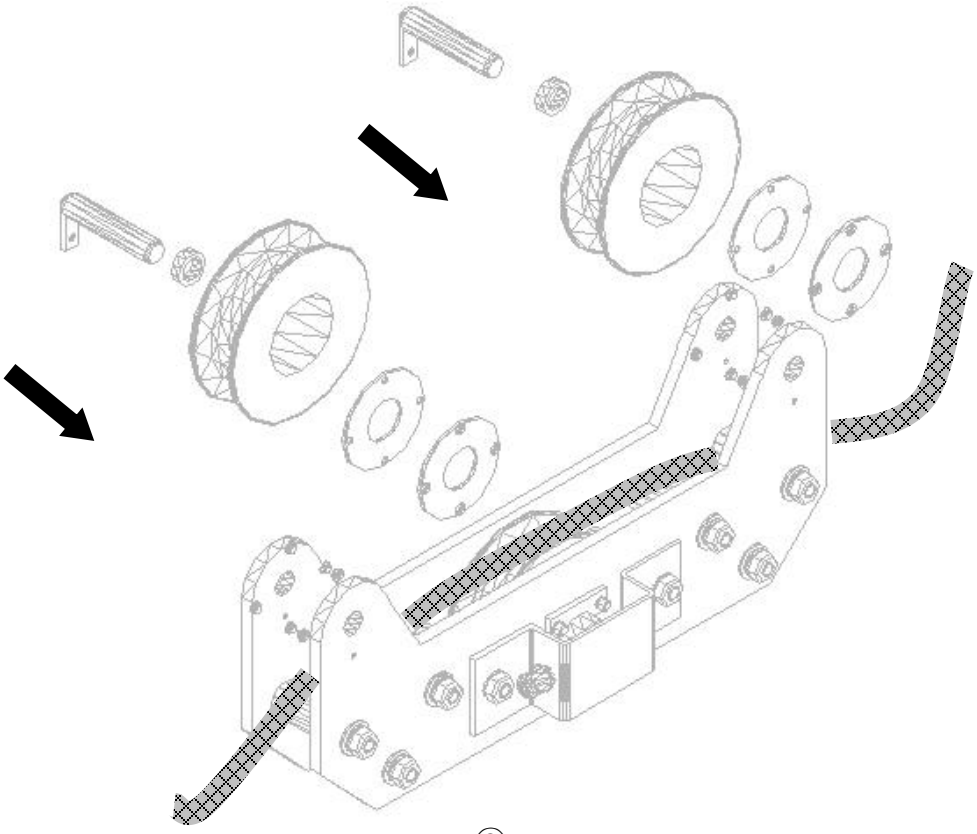

③
将两个导向轮安装好
Remount the two Guide Pulleys

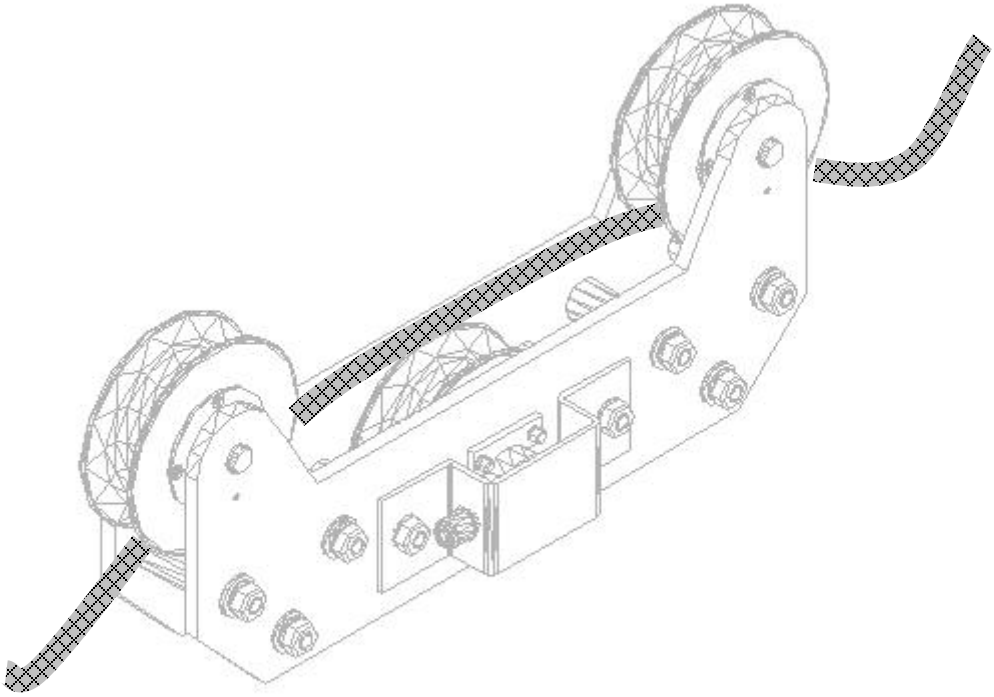

④安装完毕
Installation completed

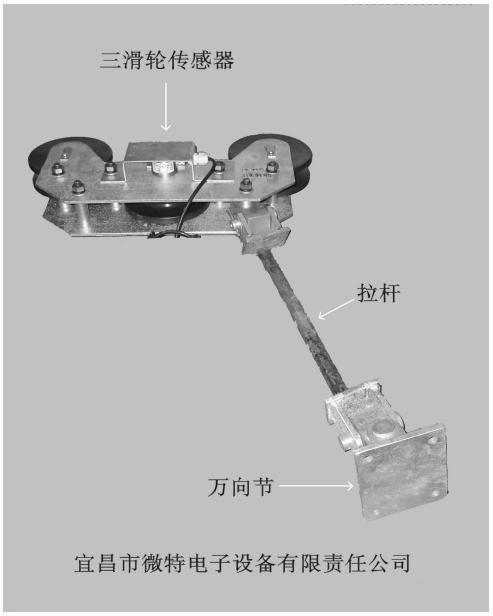

一、 **三滑轮式传感器的安装注意事项：**

1、在安装之前应充分考虑起重绳在吊车变幅过程中与吊臂之间的关系，然后根据前面叙述的办法进行安装。

2、钢丝绳在穿过三个滑轮时，钢丝绳应在中间滑轮上形成一定的弯曲角度，使中间滑轮能够检测受力情况，或者更好的测力，如下图：

Attentions required when installing 3-pulley Sensor:

1. Consider the relation of hoisting line to the arm in the process of range changes. Then, install the sensor as aforementioned.

2. When placing steel wire onto the three pulleys, form a curve on the Central Pulley so as to ensure a better result when the Central Pulley is testing the strength.

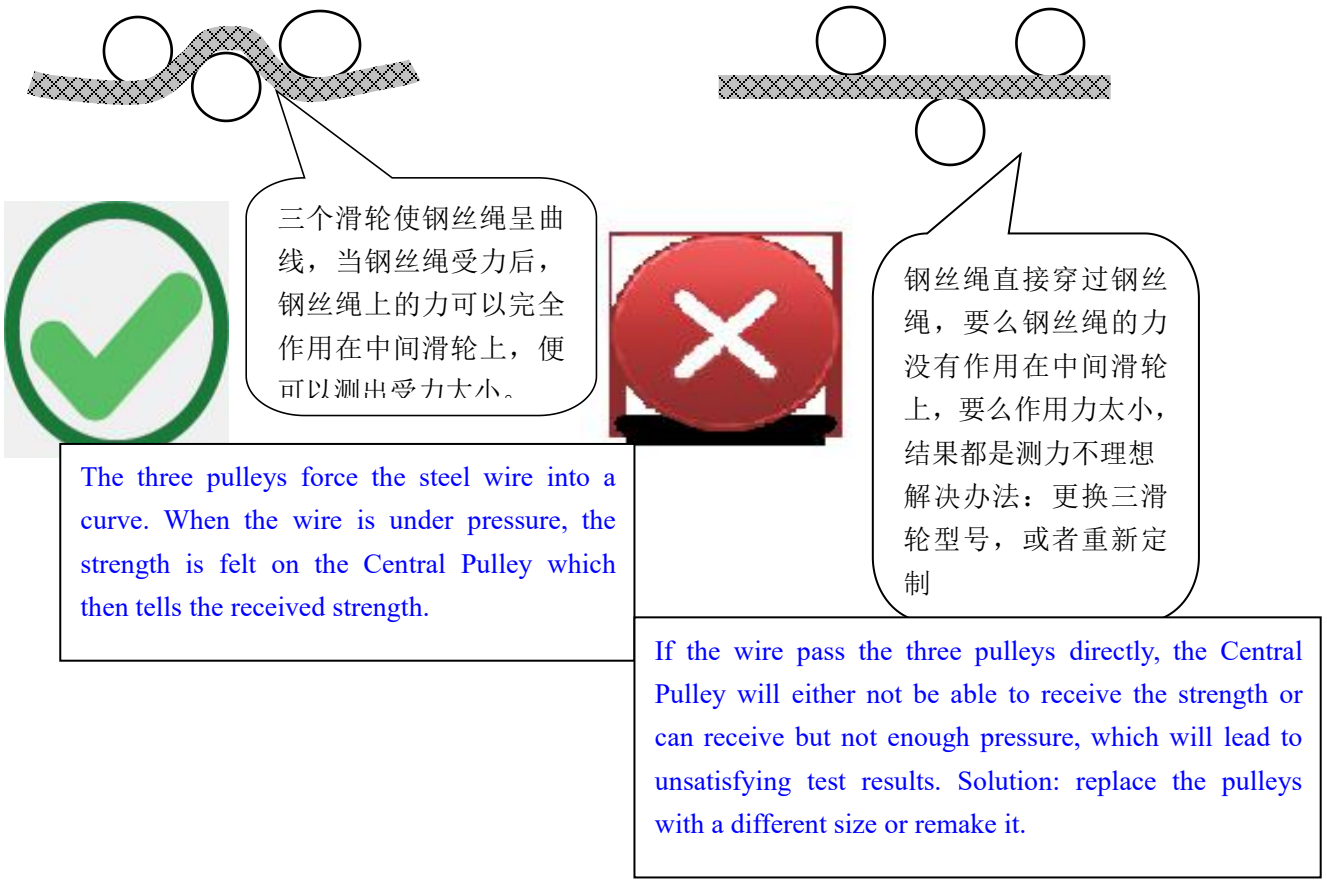

⚠注意：1、微型轴销传感器有不可敲、砸、摔、切割、熔炼等重力打击或改变传感器形体等行为；

2、传感器安装板、三个滑轮之间的角度关系都是经过专业计算后成型制作的，所以不要任意改变各螺栓的孔位、安装板外形及三个滑轮的位置关系；
3、引出线不可拉扯或弯曲，如无必要，不能拆卸；如拆卸后，必须做好防水处理；
4、用户收到货物后，请检查合格证等附件是否齐全、各机械加工件是否齐全，引线是否完好；如有问题，请及时联系我公司给您处理；
5、如人为或不可抗拒力因素造成传感器或其他物件损坏，本公司不予负责。

Cautions:

1. Do not knock, smash, break, cut or temper the Micro-dowel Sensor or change the form or structure of it.

2. The angle between the fixing board and the three pulleys is determined after precise calculations, so do not change the location of the fixing holes, the shape of the board of the position of the pulleys.

3. Do not pull or bend the outlet or extension wire. Do not dismount it unless it is necessary. Water-proof measures should be taken when dismantling the wire.

4. Check the certificates, parts, wires upon receiving the delivery. If there is any problem, call our company immediately for solutions.

5. WTAU is not liable for damages to the sensors or any other parts by man-made harm or force majeure.

五、电源线及控制线的接法：

电源线的接法：将交流 220V（或定制 DC12V）电源线穿过 PG9 锁头接在“N”“L”电源接线处拧紧即可。

控制线的接法：“NC”为常闭点，“COM” 为公共点，“NO” 为常开点。

注意：常开常闭是指仪表不上电时（继电器不动作时）的状态。在实际操作中，建议仪表完全正常工作后再接入控制线，以免数据有较大偏差时导致仪表动作而使起重机不能动作。

V. Power Cord and Pilot Control Line Connection

Power Cord connection: connect 220V alternating current power supply to “N” and “L” via PG9, then tighten the Locking Screw.

Pilot Control Line connection: “NC” stands for “normally closed contact”; “COM”stands for “common port” and “NO” stands for “normally open contact”.

Caution: “NC” and “NO” refer to situations when the instrument is not connected to power (Relay not working). In actual operations, it is recommended that connection of control line be made when the instrument is functioning normally so as to prevent the inactivity of the crane due to the act of instrument caused by data discrepancy.

六、WTL-A（200）型力矩限制器调试说明

本节涉及到对主机的调试、参数设置、数值修正等详细操作，用户在使用前需认真阅读此节并严格按操作说明操作。所有不当操作均有可能引起仪表不能正常工作甚至严重错误！

VI Commissioning of Model WTL-A (200) Torque Limiter

This section includes the detailed operation of test and adjustment on Mainframe, configuration and parameter changes. The users are recommended to read the section thoroughly and proceed strictly according to the instructions. Any improper operation may lead to malfunction of the instrument or even serious consequences.

1、 进入密码设置

在正常界面下按功能键，进入**密码设置**界面，如下：

1. Password Settings

Press “功能 Function” at normal interface to enter Password Settings as demonstrated below.

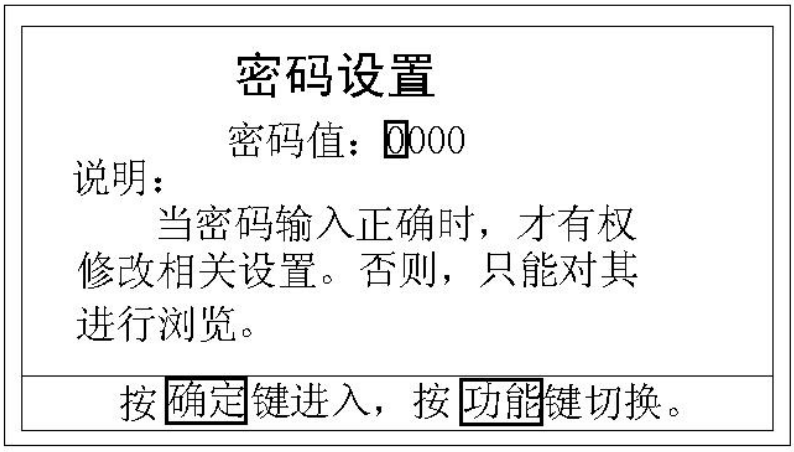

按增加或减小键改变数值，按功能键移到下一位数值，按确定键进入，按退出键放弃并返回主界面。

当密码输入错误时，将进入“浏览模式”，里面所有的菜单项目只能查看，不能修改。只有密码输入正确时才能进入 “修改模式”和“标定模式”，在这两种模式下可以对相关菜单内容进行修改设置。

进入“修改模式”密码：“1111”； 进入“标定模式”密码：“2222”

Press “增加 UP” or “减小 DOWN” to change the numerical value. Press “功能 Function” to move to next digit. Press “确定 OK” to enter and “退出 CANCEL” to abandon operation and return to main interface.

When wrong passwords are entered, the user will be in “Browse Mode”, i.e., the parameters can be viewed but not changed. Only the correct password will lead to “Change Mode” and “Calibration Mode”, under both of the two modes, parameters can be set and reset.

Password for “Change Mode” is “1111” and that for “Calibration Mode” is “2222”.

2、**菜单选择**

在“菜单选择”界面按增加或减小键移动光标位置，按确定键进入相应参数设置界面。

“菜单选择”用于选择待进入菜单。

1、“系统参数设置” 用于修改与系统及设备相关的一些参数。

2、“报警参数设置” 用于修改与报警及控制相关的一些参数。

3、“重量一标定”、“重量二标定” 用于修改与相应钩重量值相关的一些参数。

4、“臂长标定”用于标定可伸缩臂的臂长

5、“幅度标定” 用于修改与幅度值相关的一些参数

6、“起重载荷表” 用于显示起重机载荷特性表。

操作说明：按增加或减小键选择待进入菜单，按确定键进入下一级菜单。

2. Menu Selection

Move the cursor by press “增加UP” or “减小DOWN” at “Menu Selection”, press “确定OK” to enter selected parameter setting interface.

“Menu Selection” is for choosing the menu you want to enter.

1. Select “System Settings” to change the parameters related to the systems and relevant devices.
2. Select “Alarm Settings” to change the parameters related to alarms and controls.
3. Select “Weight I Calibration” and “Weight II Calibration” to change the parameters of the load of the related hook.
4. Select “Arm Length Setup” to determine the arm length of the extensible / adjustable arm.
5. Select “Radius Setup” to change parameters related to radius.
6. Select “Load Chart” to display the designed working load of the crane.

Operating instruction: press “增加UP” or “减小DOWN” to select the menus. Press “确定OK” to enter the next menu”.

3、**系统参数设置**

“系统参数设置”用于修改与系统及设备相关的一些参数。

1、“倍率”　　设备的起重绳倍率，该值在系统中参与计算。

2、“臂长”　　设备的臂长值（对于汽车吊等需标定臂长的，在此无需设定）。

3、“副臂”　　设备的副臂值。

4、“中心距”　设备的中心距(臂架根部下绞点到起重机旋转中心的距离)

5、“钩头重”　设备的钩头重量。

6、“系统地址”　设备的通讯地址，在通讯时参与运算。

7、“工况输入”设备的工况选择，从 0000 到 0062，共 63 种工况：

3. System Settings

Select “System Settings” to change the parameters related to the systems and relevant devices.

1. “Range”：change the range of the hoisting line. The value is counted for in the system.

2. “Arm Length”: change the arm length of the crane (no need to change the determined arm length of track cranes, etc.)

3. “Auxiliary Arm”: change the value of the Auxiliary Arm.

4. “Distance to Center”: change the distance to the center (distance from the upper sheave to the center of slewing platform)

5. “Hook Weight”: the weight of the hookhead.

6. “System Address”: the address of the equipment, counted for in communications.

7. “Working Conditions Input”: select the working conditions of the equipment from 63 different conditions range from 0000 to 0062.

Working Condition Input	Corresponding conditions
0000-0004	（main arm working condition outrigger fully extended 360°）Arm Length: 8.23m/12.19m/15.24m/18.29m/21.34m
0005-0009	（main arm working condition outrigger half extended 360°）Arm Length:8.23m/12.19m/15.24m/18.29m/21.34m
0010-0014	（main arm working condition outrigger not extended 360°）Arm Length:8.23m/12.19m/15.24m/18.29m/21.34m
0015-0019	（Defined Arc Over Front 16.00*24-16PR Tires）Arm Length: 8.23m/12.19m/15.24m/18.29m/21.34m
0020-0024	（360° 16.00*24-16PR Tires）Arm Length: 8.23m/12.19m/15.24m/18.29m/21.34m
0025-0029	（360°Pick & Carry Up to 2.5MPH 16.00*24-16PR Tires）Arm Length: 8.23m/12.19m/15.24m/18.29m/21.34m

0030-0034	（ Defined Arc Over Front 17.50*25-20PR Tires ） Arm Length: 8.23m/12.19m/15.24m/18.29m/21.34m
0035-0039	（360°17.50*25-20PR Tires）Arm Length: 8.23m/12.19m/15.24m/18.29m/21.34m
0040-0044	（ 360°Pick & Carry Up to 2.5MPH 17.50*25-20PR Tires ） Arm Length: 8.23m/12.19m/15.24m/18.29m/21.34m
0045-0047	（auxiliary arm working condition outrigger fully extended arm length: 7.62m） Crossing Angle：0°/15°/30°
0048-0050	（auxiliary arm working condition outrigger fully extended arm length: 10.36m） Crossing Angle：0°/15°/30°
0051-0053	（auxiliary arm working condition outrigger fully extended arm length: 13.11m） Crossing Angle：0°/15°/30°
0054-0056	（auxiliary arm working condition outrigger half extended arm length: 7.62m） Crossing Angle：0°/15°/30°
0057-0059	（auxiliary arm working condition outrigger half extended arm length: 7.62m） Crossing Angle：0°/15°/30°
0060-0062	（auxiliary arm working condition outrigger half extended arm length: 7.62m） Crossing Angle：0°/15°/30°

操作说明：（以修改倍率值为例说明）

1、 按增加、减小键移动光标到“倍率”参数上。

2、 按确定键进入“倍率”参数的修改模式。

按功能键切换待修改数字，按增加、减小键对待修改数字进行修改。按确定键保存退出，或按退出键不保存退出。

Operating Instructions: (taking Range Value as an example)

1. Press “增加 UP” or “减小 DOWN” to move the cursor to “Range”.
2. Press “确定 OK” to change the parameters of “Range”.

3. Press “功能 Function” to switch the items to be changed. Press “增加 UP” or “减小 DOWN” to change the numerical value. Press “确定 OK” to save the change and quit, or “退出 CANCEL” to quit without saving the change.

3、报警参数设置

“报警设置” 用于修改与报警及控制相关的一些参数。

1、“控制延时” 当显示达到设定的控制点时延时 xx 秒后继电器动作。（此数值范围在 0-20 秒之间）

2、“满载率” 系统起重的满载报警点百分比，一般设 90%；

3、“超载率” 系统起重的超载控制点百分比，一般设 100%；

4、“偏载” 用于可抬吊的吊车，设置偏载量

5、“幅度上限偏移”、“ 幅度下限偏移”相应控制参数值偏移（一般无需设置）。

操作说明：（以修改“控制延时”为例说明）

1、 移动光标到“控制延时”参数上。

2、 修改数字，按增加、减小键对待修改数字进行修改。按确定键保存退出，或按退出键不保存退出。

3. Alarm Settings

Select “Alarm Settings” to change parameters related to alarm and control.

1. “Control Delay”: delay xx seconds (range from 0-20 seconds) when reaches preset point before the Relay operates.

2. “Full Load Rate”: the ratio of actual load of the system to full load usually set at 90%.

3. “Overload Rate”: the ration of actual load of the system to overload control point, usually set at 100%.

4. “Unbalanced Loading”: the capacity of unbalanced load (for double crane hoisting).

5. “Range Maximum Skewing”, “Range Minimum Skewing”: skew the relevant control

parameters (normally no need to setup)

Operating Instructions: (taking “Control Delay” as an example)

1. Move the cursor to “Control Delay”.

2. Change the numerical value by press “增加UP” or “减小DOWN”.

Press “确定OK” to save the change and quit, or “退出CANCEL” to quit without saving the change.

4、**重量标定**

重量标定界面如下图（以“重量一标定”为例）：

4. Weight Calibration

Weight Calibration interface is as follows (taking Weight I Calibration as an example)

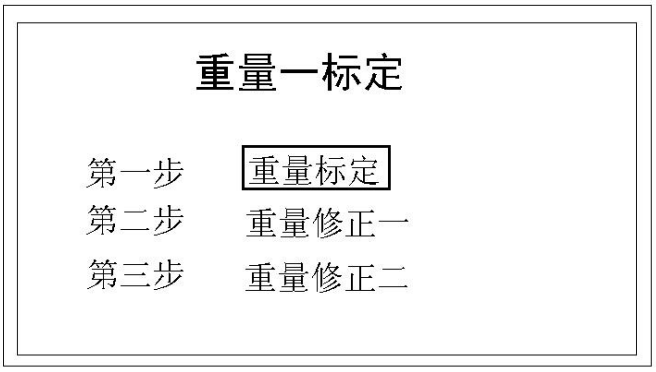

1、“重量标定” 重量一参数硬件上的标零、标满、清零。

2、“重量修正” 重量参数非线性修正（非调试人员勿动）。

重量标定说明：

“重量标定” 用于设定重量模数值与显示吨位的关系。

1、“重量标零” 确定重量零点与模数值的对应关系。

2、“重量标满” 确定重量满度与模数值的对应关系。

3、“重量清零” 在现场用于重量零点的迁移。

备注：

重量标零、标满用于确定重量零点与满度之间的两点关系。

重量清零用于重量零点的迁移。但不影响零点与满度之间的两点关系。

1. “Weight Calibration”: zero calibration, full scale calibration and clearing of Weight I parameters on hardware.
2. “Weight Change”: non-linear adjustment of weight parameters (for trained professionals only)

Weight Calibration Instructions:

“Weight Calibration” is designed to set up the relation between the simulated numerical value and displayed tonnage.

1. “Weight Zero Calibration”: determine the relation between point zero and the simulated numerical value.
2. “Weight Full Scale Calibration”: determine the relation between weight full scale and the simulated numerical value.
3. “Weight Clearing”: zero clearing on site.

“Weight Nominal Zero” and “Weight Full Scale” are used for establishing the relation between weight zero and full scale.
“Weight Clearing” is used for remove the Weight Zero. It does not affect the relation between the point zero and full scale.

重量标定操作说明（进入标定模式）：

1、在不吊重物（即空钩）的情况下，进行重量标零（空钩离地 1 米），此时模数值应在大于 8，小于 4095。

a、 按增加、减小键移动光标到重量标零上。

b、 按确定键进入重量标零。此时，重量标零后的模数值显示为当前模数值，光标停留在标定值上（如上图）。

c、 按确定键保存退出，或按退出键不保存退出。

Operating Instructions for Weight Calibration (enter Calibration Mode):

1. When the crane is not lifting (i.e., hook in idle), proceed the Weight Zero Calibration (idle hook 1m above the ground). The simulated value should be within the range of 8-4095.

a. Press "增加 UP" or "减小 DOWN" to move the cursor to Weight Zero Calibration.

b. Press "确定 OK" to begin calibration. Now, the displayed value is the same with the simulated value after Weight Zero Calibration. The Cursor stays at the calibrated value. (as illustrated in the picture above)

c. Press "确定 OK" to save the change and quit, or "退出 CANCEL" to quit without saving the change.

2、 在起吊已知重物（≥额重 50%）的情况下（如 150T），离地 1 米稳定后，进行重量标满。

a、 按增加、减小键移动光标到重量标满上。

b、 按确定键进入重量标满。此时，重量标满后的模数值显示为当前模数值，光标停留在标定值上。

c、 按功能键切换待修改数字，按增加、减小键对待修改数字进行修改（使显示 150T）。按确定键保存退出，或按退出键不保存退出。

2. When lifting goods whose weight (≥50% of the rated load capacity) is known (say 150T), start Weight Full Scale Calibration when it stabilizes 1m above the ground.

a. Press "增加 UP" or "减小 DOWN" to move the cursor to Weight Full Scale Calibration.

b. Press "确定 OK" to begin Weight Full Scale Calibration. Now, the displayed value is the same with the simulated value after Weight Full Scale Calibration. The Cursor stays at the calibrated

value.

c. Press “功能 Function” to switch the items to be changed. Press “增加 UP” or “减小 DOWN” to change the numerical value. Press “确定 OK” to save the change and quit, or “退出 CANCEL” to quit without saving the change.

3、 重量标定结束，此时仪表显示重量应该和所吊重物一致。

现场清零过程（当使用一段时间后，空钩时零点发生较大变化，可通过清零来平移标定的线性关系）。

1、 按增加、减小键移动光标到重量清零上。

2、 按确定键进入重量清零的修改模式。此时，重量清零后的模数值显示为当前模数值，光标停留在标定值上。

3、 按确定键保存退出，或按退出键不保存退出。

备注：“重量标零”、“重量标满”在“修改模式”下可以修改，“重量清零”在“修改模式”、“标定模式”下均可以修改。重量修正用于重量参数非线性修正，常规不用。

重量二标定同重量一标定相同。

3. After Weight Calibration, the weight displayed on the instrument should be in accordance with the load on hook.

On-site clearing procedure (having been operating for a period of time, the zero point of the idle hook may change considerably. By clearing, you can reset the calibrated linear relation)

a. Press “增加 UP” or “减小 DOWN” to move the cursor to Weight Clearing.

b. Press “确定 OK” to begin clearing. Now, the displayed value is the same with the simulated value after clearing. The Cursor stays at the calibrated value.

c. Press “确定 OK” to save the change and quit, or “退出 CANCEL” to quit without saving the change.

Note: “Weight Zero Calibration” and “Weight Full Scale Calibration” can be reset under “Change Mode”; “Weight Clearing” can be reset under both the “Change Mode” and the

"Calibration Mode". Weight adjustment is applied only onto non-linear changes to weight parameter. It is not used on regular basis.

The procedure for Weight II Calibration is the same with Weight I Calibration

6、**幅度标定**

"幅度标定" 用于修改与幅度值相关的一些参数。一般情况下，分为：

1、"角度标定" 角度参数硬件上的标零、标满（出厂时已标定，一般无需标定）。

2、"幅度标定" 现场幅度标定。

3、"幅度修正" 幅度参数非线性修正。

4、"副角标定" 副角度参数硬件上的标零、标满。

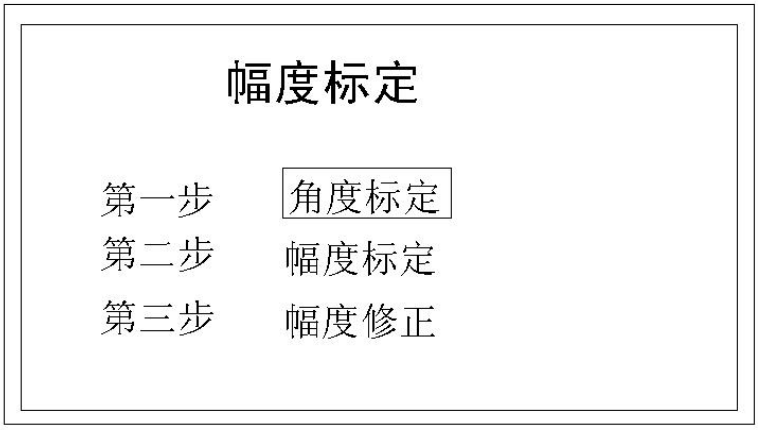

6. Range Calibration

"Ranger Calibration" is used for changing the parameters related to range. In normal situations, it can be categorized into:

1. "Angle Calibration": Zero Calibration and Full Scale Calibration of angular parameters on hardware (preset in factory, so no need to reset).
2. "Range Calibration": to calibrate range on site.
3. "Range Change": non-linear change to parameters of the range.
4. "Subangle Calibration": Zero Calibration and Full Scale Calibration of sub-angular

parameters on hardware.

操作说明：

按功能键选择待进入菜单，按确定键进入下一级菜单。

角度标定说明:

角度标定		
模数值： 0028	角度值 :0006	
实际幅度值:000.0m		
实际角度值:000.0°		
	模数值	标定值
角度标零: ----	0300	000.0°
角度标满： ----	3200	090.0°

功能说明：

“角度标定” 用于角度参数硬件上的标零、标满，用于确定角度零点与满度之间的两点关系。一般情况下，分为：

1、“角度标零” 确定角度零点与模数值的对应关系。

2、“角度标满” 确定角度满度与模数值的对应关系。

备注：该系列参数只能在“标定模式”下修改。出厂前已经设置好了,通常不用修改，幅度标定和幅度修正用于对幅度相关参数的修改，正常情况下不用修改。

Operating instructions:

Press “功能 Function” to select the menu you want to enter and “确定 OK” to enter the next

menu.

Angle Calibration instructions:

Functions:

"Angle Calibration" is used for Zero Calibration and Full Scale Calibration of angular parameter on hardware and for the establishment of relation between Point Zero and Full Scale. Usually, it can be classified into:

1. "Angle Zero Calibration": determine the relation between point zero and the simulated numerical value.
2. "Angle Full Scale Calibration": determine the relation between weight full scale and the simulated numerical value.

Note: the parameters can be changed only under "Calibration Mode". They have been set up in factory and thus do not require adjustment in general. Range Calibration and Adjustment are for changes to parameters of range which normally do not require adjustment.

7、**臂长标定**

"臂长标定" 用于标定臂长值。一般情况下，分为：

1、"臂长标零" 设置臂长的零点（基本臂长）。

2、"臂长标满" 最大臂长标定。

7. Arm Length Calibration

"Arm Length Calibration" is for calibrating arm length. In general, it can be classified into:

1. "Arm Length Zero Calibration": to reset the zero point of arm length (basic arm length)
2. "Arm Length Full Scale Calibration": to calibrate the maximum arm length.

臂长标定

模数值：0056　　臂长值：0.985M

	模 数 值	标 定 值
臂长标零：	0200	11.00M
臂长标满：	3200	35.00M

臂长标定操作说明：

1、将臂全部收回

a、按增加、减小键移动光标到臂长标零上。

b、按确定键进入臂长标零。此时，臂长标零后的模数值显示为当前模数值，光标停留在标定值上。

c、按增加、减小键将标定值修改成基本臂长

d、按确定键保存退出，或按退出键不保存退出。

2、将臂全部伸出。

a、按增加、减小键移动光标到臂长标满上。

b、按确定键进入臂长标满。此时，臂长标满的模数值显示为当前模数值，光标停留在标定值上。

c、按增加、减小键将标定值修改成最大臂长.

d、按确定键保存退出，或按退出键不保存退出。

备注：“臂长标定”在 “标定模式”下可以修改。

“起重载荷曲线”用于查看吊车曲线，确定键进入，功能键切换

备注：长按增加键可切换中英文显示

Operating Instructions:

1. Draw back the arm completely

a. Press “增 加 UP” or “减 小 DOWN” to move the cursor to Arm Length Full Scale Calibration.

b. Press “确 定 OK” to begin calibrating. Now, the displayed value is the same with the simulated value after calibration. The Cursor stays at the calibrated value.

c. Press “增加 UP” or “减小 DOWN” to change the calibrated value to basic arm length.

d. Press “确定 OK” to save the change and quit, or “退出 CANCEL” to quit without saving the change.

2. Stretch the arm completely

a. Press "增加 UP" or "减小 DOWN" to move the cursor to Arm Length Zero Calibration.

b. Press "确定 OK" to begin calibrating. Now, the displayed value is the same with the simulated value after calibration. The Cursor stays at the calibrated value.

c. Press "增加 UP" or "减小 DOWN" to change the calibrated value to maximum arm length.

d. Press "确定 OK" to save the change and quit, or "退出 CANCEL" to quit without saving the change.

Note: "Arm Length Zero Calibration" can be changed under "Calibration Mode".

"Rated Load Curve" is to demonstrate the skewing of the crane. Press "OK" to enter and "Function" to switch items.

Note: press "增加 UP" and hold it down to change languages (Chinese / English).

七、仪表维护及常见故障处理

（一）、检修维护注意事项

1、电源、控制线和信号线连接要注意接线标号，以免损坏仪器；

2、当需要拆除整机时注意记录各个连接线，以免接错损坏主机；

3、拆除运输中需注意对仪器的保护；

4、每天下班时，应关闭电源；避免仪器直接遭受雨淋；

5、非维护人员不得随意调整仪器的任何部分，如出现异常先由专业设备维护人员按说明书中提供的方法处理。如果故障仍无法排除,请与我公司技术支持人员联系；

6、定期检查系统精度,检查周期为 3～6 个月，以保证起重机的安全使用，并作好文字记录、存档。

VII Instrument Maintenance and Settlement of Common Faults

1. Tips for repair and maintenance

a. When connecting power cords, pilot control lines or signal lines, attention should be paid to

wiring marks to prevent damages to equipment.

b. When dismounting the machine under certain situations, note down the connections of different lines so as to prevent damages to the mainframe in case of wrong connection.

c. Protect the equipment when dismantling for transport.

d. Switch off the power before leaving for home everyday. Prevent the instrument from exposure to rain.

e. Non-maintenance personnel should not be allowed to change any part of configuration of the equipment. In case of malfunction / abnormality, the trained professionals should handle the problems according to the methods and procedures specified in the Manual. If the problem is too tricky to solve, contact our technical support staff.

f. Check the accuracy of the system regularly with an interval of 3-6 months to ensure the safe operation of the crane. Reports are needed for file.

（二）、常见故障分析、处理

1、开机后仪器不工作、显示器不显示；

原因：电源线断或无电源输入；稳压电源出故障；保险丝烧断；

处理方法：检查电源电路输出电压，接通电源；

2、重量显示值不变化

原因：重量传感器电缆线断、重量传感器损坏、仪表零点标定和满值标定不正确。

处理方法：查出电缆断线处、按颜色重新接好并做防水处理、更换

传感器、重新进行重量零点标定和满值标定。

3、信号引入后，显示值相应变化，但与实际值偏差超出误差范围。

原因：仪表零点标定和满值标定不正确；

处理方法：重新进行重量零点标定和满值标定；

2. Analysis and Settlement of Common Failures

a. Display Instrument not operating, monitor not working.

Reasons: Power cord is pulled out or no electric power input; malfunction of stabilized power source; safety fuse blew out.

Solutions: check the power lines and output voltage, connect the power supply.

b. Weight Value doesn't change.

Reason：Weight Sensor cable failure; Weight Sensor damaged or Zero and Full Scale Calibration are incorrect.

Solutions: find the break point of the cable, reconnect it according to its color and take water-proof measures; or replace the sensor and recalibrate the Weight Zero and Weight Full Scale.

c. Upon receiving the signal, the displayed values change accordingly but in big discrepancy with the actual values and beyond the range of permissible error.

Reasons: Incorrect Calibration of Zero and Full Scale.

Solutions: recalibrate the Weight Zero and Weight Full Scale.

（三）、重量传感器的接线

我公司的重量传感器采用四线制接线方式：

EXC+：供电+10V　　EXC-：供电 GND　　SIG+：信号+　　SIG-：信号-

SHIELD:接地

通常情况下，外接延长线颜色遵循下列规律：

EXC+：蓝色　　SIG+：棕色　　SIG-：黄色　　EXC-：黑色

3. Connection of Weight Sensors

Four-wire system is adopted in line connection of our weight sensors.

EXC+：Power Supply +10V　　EXC-：Power Supply GND　　SIG+：Signal+　　SIG-：Signal-

SHIELD: Ground Connection

In general conditions, the colors of the external extension lines are:

EXC+：Blue　　SIG+：Brown　　SIG-：Yellow　　EXC-：Black

WEITE TECHNOLOGIES CO.,LTD.

Oversea sales

MSN:ycwtau@hotmail.com

Tel:86-400-008-2600

Mob:86-15207201892

Web:www.wtau.com

http://wtau.en.alibaba.com/