ABSA
the pressure equipment safety authority

9410 - 20 Ave N.W.
Edmonton, Alberta, Canada T6N 0A4
Tel: (780) 437-9100 / Fax: (780) 437-7787

January 28, 2025

Attention: Alicia Czerniawski
ANRIC ENTERPRISES INC
703 EVANS AVENUE SUITE 200
TORONTO, ON M9C 5E9

The design submission, Tracking Number 2025-00173, Web Portal Number 2025-S0083, originally received on January 09, 2025 was surveyed and accepted for registration as follows:

CRN : 0B17376.52 **Accepted on:** January 28, 2025

Reg Type: RENEWAL **Expiry Date:** December 19, 2034

Drawing No. : Scope of CRN Renewal Registration

Fitting type: Standard B16.5 and B16.47 Flanges

Design registered in the name of : YANGZHOU HUAYU PIPE FITTINGS CO LTD

The registration is conditional on your compliance with the following notes:

1. This registration applies only to flanges which are in full compliance with B16.5 or B16.47, including being made from materials listed in those standards.

As indicated on AB-41 Statutory Declaration or AB-351 Declaration of Conformity form and submitted documentation, the code of construction are B16.5 and B16.47.

- It is our understanding that the fitting(s), included as the scope of this submission, that is(are) subject to the Safety Codes Act shall comply with the requirements of the indicated Standard or Code of Construction on the AB-41 Statutory Declaration or AB-351 Declaration of Conformity as supported by the attached data which identifies the dimensions, materials of construction, press./temp. ratings and the basis for such ratings, and the identification marking of the fittings.
- This registration is valid only for fittings fabricated at the location(s) covered by the QC certificate attached to the accepted AB-41 Statutory Declaration or AB-351 Declaration of Conformity form.
- This registration is valid only until the indicated expiry date and only if the Manufacturer maintains a valid quality management system approved by an acceptable third-party agency, and maintains a valid Certification of Authorization Permit if required by the jurisdiction where manufacturing takes place, until that date.
- Should the approval of the quality management system lapse before the expiry date indicated above, this registration shall become void.

An invoice covering survey and registration fees will be forwarded from our Revenue Accounts.

If you have any question don't hesitate to contact me by phone at (587) 943-8739 or fax (403) 291-4545 or e-mail LakeA@absa.ca.

Sincerely,



LAKE, ANITA, P. Eng.
DOP Cert. No. D00010563

Alberta Government

ABSA
the pressure equipment safety authority

AB-41 2024-03

STATUTORY DECLARATION
Registration of Fittings
Single or Multiple Fitting Designs within one Fitting Category

In this space, show facsimile of manufacturer's logo or trademark as it will appear on the fitting.

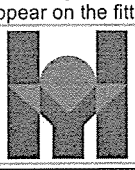

I, Wang Xin (name of applicant), CEO (position title) (must be in a position of authority)

of YANGZHOU HUAYU PIPE FITTING CO.,LTD. (name of manufacturer)

located at No.99,Baoying Street,Baoying County,Jiangsu Province,China. (plant address)

do solemnly declare that the fittings listed hereunder, which are subject to the Safety Codes Act (select only one)

☑ comply with the requirements of ASME B16.5, B16.47 (title of recognized North American Standard) which specifies the dimensions, materials of construction, pressure/temperature ratings and identification marking of the fittings, or

☐ are not covered by the provisions of a recognized North American standard and are therefore manufactured to comply with _____ (title of code of construction or other applicable document) as supported by the attached data which identifies the dimensions, materials of construction, pressure/temperature ratings and the basis for such ratings, and the identification marking of the fittings.

I further declare that the manufacture of these fittings is controlled by a quality control program which has been verified as described in the below Table as being suitable for the manufacturing of these fittings to the stated standard, regulation, code, guideline or other applicable document. The fittings covered by the declaration for which I seek registration are as provided in the Supplementary Sheet(s) attached.

Quality Program Verification and Manufacturing Sites

A copy of the Quality Certificate from each manufacturing site must be included

Item #	Product Description, Model or Series	Quality Program	Scope of Certification	Expiry Date	Verifying Organization	Location(s) Plant Name and address
1.	Flanges	ISO 9001:2015	Seamless and welding steel butt welding fittings, forged fittings and flanges	2027-07-05	Huaxia Certification Center, Inc.	No.99,Baoying Street, Baoying County, Jiangsu Province, China
2.						

Tracking #:_____

Alberta Government

the pressure equipment safety authority

AB-41 2024-03

In support of this application, the following information, calculations and/or test data are attached:

1.The copy of ISO9001 certificate, 2. Scope of Registration, 3. Drawings,

4. Brief of material

J Bwanyxin — (Signature of the Declarer)

2024-9-10 — (Date)

DECLARED before me at Baoying (city) in the People's Republic of China (province, territory, or state)

this 10th day of September (Month), 2024 (Year)

(print) _____ (a Commissioner of Oaths or Notary Public)

(sign) _____ (a Commissioner of Oaths or Notary Public)

_____ (expiry date (mm/dd/yy))

Commissioner of Oaths / Notary Public in and for: _____ (province, territory, or state)

For ABSA Office Use Only:

NOTES: _____

To the best of my knowledge and belief, the application meets the requirements of the Safety Codes Act and CSA Standard B51, Part 1, Clause 4.2, and is accepted for registration in Category _____.

CRN: _____

Registered Date: _____

Expiry Date: December 19, 2034

Signature: _____
(Signature of the Administrator/SCO)

The information you provide is necessary only for the administration of the programs as required by the Alberta Safety Codes Act and Regulations in the Pressure Equipment Discipline

2025-00173
ABSA
SAFETY CODES ACT - PROVINCE OF ALBERTA
ACCEPTED: 0B17376.52
See acceptance letter for conditions of registration.
Date: 2025-01-28 By: Anita Lake
ANITA LAKE, P. Eng.
DOP: D00010563

This stamp and signature have been affixed electronically to this registered design as required by Section 20(1) of the Pressure Equipment Safety Regulation, in accordance with the Electronic Transactions Act.

Tracking #: _____

Table 1 Scope of Fitting Designs**

Item #	Primary Pressure Bearing / Retaining Component	Material of Construction	Port Connections and Size Range	MDMT	Rated Pressure		Pressure Class(es) / Schedule(s)	Design Code(s) of Construction	Reference Catalogue (pages) or Drawing(s)
					At Ambient Temperature	At Maximum Temperature			
------ As per the Scope of CRN Renewal Registration attached -------									

Table 2 Additional Scope Information

List/Attach Additional Detail and References (Product Configurations, Options, Illustrations, etc.)
Example: Series X Options

** For additional alternatives of Table 1, refer to Form AB-41a, Guide for Completing Form AB-41

Tracking #:_____

公 证 书

(2024)苏宝证字第2010号

申请人：扬州华宇管件有限公司，统一社会信用代码：91321023718544699R，住所：宝应县宝应大道99号。

法定代表人：王鑫，男，1992年10月5日出生，公民身份号码：321023199210050411。

公证事项：签名

兹证明扬州华宇管件有限公司的法定代表人王鑫于2024年9月10日来到我处，在本公证员的面前，在前面的英文文件上签名。

中华人民共和国江苏省宝应县公证处

公证员 仇振华

江苏省宝应县公证处

2024年9月11日

IV65164898

NOTARIAL CERTIFICATE

(2024) S.B.Z.Zi, No. 2010

Applicant: YANGZHOU HUAYU PIPE FITTING CO., LTD., Unified Social Credit Code: 9132102371854469 9R, Address: No. 99, Baoying Street, Baoying County.

Legal Representative: Wang Xin, male, was born on October 5, 1992, ID No.: 321023199210050411.

Issue under notarization: Signature

This is to certify that Wang Xin, the legal representative of YANGZHOU HUAYU PIPE FITTING CO., LTD., came to our notary public office and signed the foregoing English document on September 10, 2024 in the presence of me, the notary public.

Notary: Qiu Zhenhua (Signature)

Baoying Notary Public Office,

Jiangsu Province (Seal)

The People's Republic of China

September 11, 2024

IV65164899

Scope of CRN Renewal Registration

NO. 序号	DESCRIPTION 叙述	STANDARDS 标准	SIZE RANGE 尺寸范围	DRAWING NUMBER 图号
1	CL150 FLANGES	ASME B16.5	1/2" ~ 24"	HY-CRN-150FL-32-2014
2	CL300 FLANGES	ASME B16.5	1/2" ~ 24"	HY-CRN-300FL-33-2014
3	CL400 FLANGES	ASME B16.5	1/2" ~ 24"	HY-CRN-400FL-34-2014
4	CL600 FLANGES	ASME B16.5	1/2" ~ 24"	HY-CRN-600FL-35-2014
5	CL900 FLANGES	ASME B16.5	1/2" ~ 24"	HY-CRN-900FL-36-2014
6	CL1500 FLANGES	ASME B16.5	1/2" ~ 24"	HY-CRN-1500FL-37-2014
7	CL2500 FLANGES	ASME B16.5	1/2" ~ 12"	HY-CRN-2500FL-38-2014

2025-00173

ABSA

SAFETY CODES ACT - PROVINCE OF ALBERTA

ACCEPTED: 0B17376.52

See acceptance letter for conditions of registration.

Date: 2025-01-28 By:

ANITA LAKE, P. Eng.
DOP: D00010563

This stamp and signature have been affixed electronically to this registered design as required by Section 20(1) of the Pressure Equipment Safety Regulation, in accordance with the Electronic Transactions Act.

Scope of CRN Renewal Registration

NO. 序号	DESCRIPTION 叙述	STANDARDS 标准	SIZE RANGE 尺寸范围	DRAWING NUMBER 图号
1	Class 150 Series A Flanges	ASME B16.47	26" ~ 60"	HY-CRN-150A-16-2014
2	Class 300 Series A Flanges	ASME B16.47	26" ~ 60"	HY-CRN-300A-17-2014
3	Class 400 Series A Flanges	ASME B16.47	26" ~ 60"	HY-CRN-400A-18-2014
4	Class 600 Series A Flanges	ASME B16.47	26" ~ 60"	HY-CRN-600A-19-2014
5	Class 900 Series A Flanges	ASME B16.47	26" ~ 60"	HY-CRN-900A-20-2014
6	Class 75 Series B Flanges	ASME B16.47	26" ~ 60"	HY-CRN-75B-21-2014
7	Class 150 Series B Flanges	ASME B16.47	26" ~ 60"	HY-CRN-150B-22-2014
8	Class 300 Series B Flanges	ASME B16.47	26" ~ 60"	HY-CRN-300B-23-2014
9	Class 400 Series B Flanges	ASME B16.47	26" ~ 60"	HY-CRN-400B-24-2014
10	Class 600 Series B Flanges	ASME B16.47	26" ~ 60"	HY-CRN-600B-25-2014
11	Class 900 Series B Flanges	ASME B16.47	26" ~ 60"	HY-CRN-900B-26-2014

2025-00173

ABSA

SAFETY CODES ACT - PROVINCE OF ALBERTA

ACCEPTED: 0B17376.52

See acceptance letter for conditions of registration.

Date: 2025-01-28 By:

ANITA LAKE, P. Eng.
DOP: D00010563

This stamp and signature have been affixed electronically to this registered design as required by Section 20(1) of the Pressure Equipment Safety Regulation, in accordance with the Electronic Transactions Act.

法兰类型、规格及尺寸参数

FLANGE TYPE, SPECIFICATIONAND SIZE PARAMETERS

(ASME B16.5)

编　制 PREPARATION:

审　核 REVIEWED:

批　准 APPROVED:

扬州华宇管件有限公司

YANGZHOU HUAYU PIPE FITTING CO., LTD

Drawing number: HY-CRN-150FL-32-2014

Standard: ASME B16.5

CL150 FLANGES

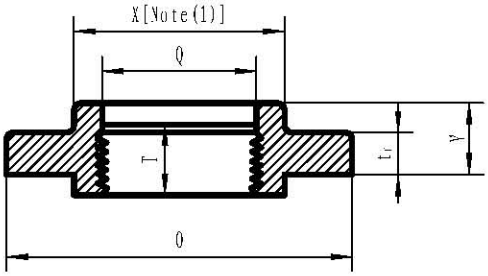

Threaded

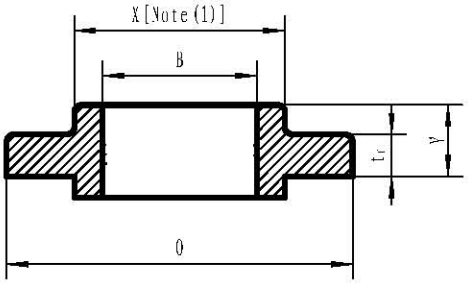

Slip-On Welding

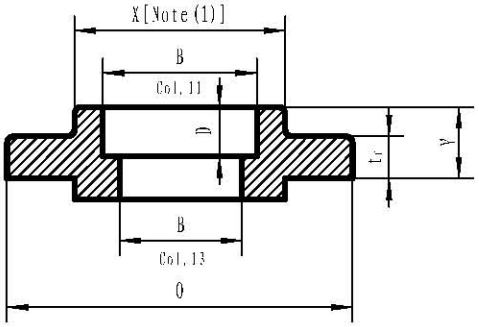

Socket Welding(NPS1/2 to 3 only)

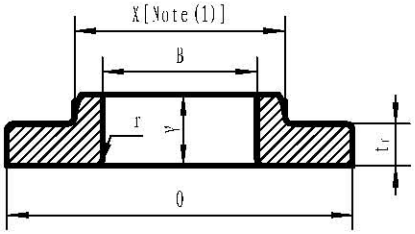

Lapped

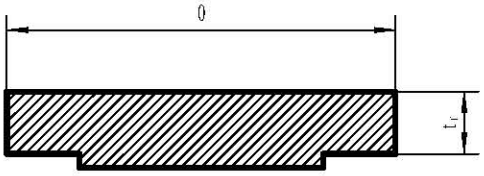

Blind

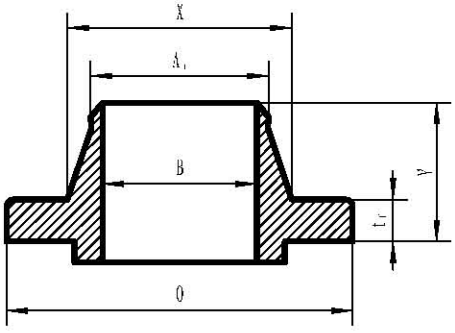

Welding Neck

The preparation of units: Yangzhou Huayu pipe fittings Co., Ltd.

ASME B16.5

1 CL150 FLANGES

1	2	3	4	5	6	7	8	9	10	11	12	13	14	15
						Length Through Hub				Bore				
Nominal Pipe Size, NPS	Outside Diameter of Flange, *O*	Minimum Thickness of Flange, t_f [Notes (2)-(4)]	Minimum Thickness Lap Joint, t_f	Diameter of Hub, *X*	Hub Diameter Beginning of Chamfer Welding Neck, A_h [Note (5)]	Threaded/ Slip-on/ Socket Welding, *Y*	Lapped, *Y*	Welding Neck, *Y*	Minimum Thread Length Threaded, *T* [Note (6)]	Minimum Slip-on/ Socket Welding, *B*	Minimum Lapped, *B*	Welding Neck/ Socket Welding, *B* [Note (7)]	Corner Bore Radius of Lapped Flange and Pipe, *r*	Depth of Socket, *D*
1/2	90	9.6	11.2	30	21.3	14	16	46	16	22.2	22.9	15.8	3	10
3/4	100	11.2	12.7	38	26.7	14	16	51	16	27.7	28.2	20.9	3	11
1	110	12.7	14.3	49	33.4	16	17	54	17	34.5	34.9	26.6	3	13
1 1/4	115	14.3	15.9	59	42.2	19	21	56	21	43.2	43.7	35.1	5	14
1 1/2	125	15.9	17.5	65	48.3	21	22	60	22	49.5	50.0	40.9	6	16
2	150	17.5	19.1	78	60.3	24	25	62	25	61.9	62.5	52.5	8	17
2 1/2	180	20.7	22.3	90	73.0	27	29	68	29	74.6	75.4	62.7	8	19
3	190	22.3	23.9	108	88.9	29	30	68	30	90.7	91.4	77.9	10	21
3 1/2	215	22.3	23.9	122	101.6	30	32	70	32	103.4	104.1	90.1	10	...
4	230	22.3	23.9	135	114.3	32	33	75	33	116.1	116.8	102.3	11	...
5	255	22.3	23.9	164	141.3	35	36	87	36	143.8	144.4	128.2	11	...
6	280	23.9	25.4	192	168.3	38	40	87	40	170.7	171.4	154.1	13	...
8	345	27.0	28.6	246	219.1	43	44	100	44	221.5	222.2	202.7	13	...
10	405	28.6	30.2	305	273.0	48	49	100	49	276.2	277.4	254.6	13	...
12	485	30.2	31.8	365	323.8	54	56	113	56	327.0	328.2	304.8	13	...
14	535	33.4	35.0	400	355.6	56	79	125	57	359.2	360.2	Note (8)	13	...
16	595	35.0	36.6	457	406.4	62	87	125	64	410.5	411.2	Note (8)	13	...
18	635	38.1	39.7	505	457.0	67	97	138	68	461.8	462.3	Note (8)	13	...
20	700	41.3	42.9	559	508.0	71	103	143	73	513.1	514.4	Note (8)	13	...
24	815	46.1	47.7	663	610.0	81	111	151	83	616.0	616.0	Note (8)	13	...

Drawing number: HY-CRN-300FL-33-2014

Standard: ASME B16.5

CL300 FLANGES

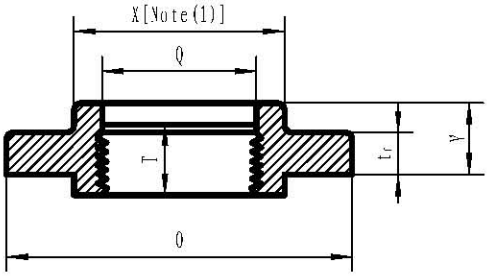

Threaded

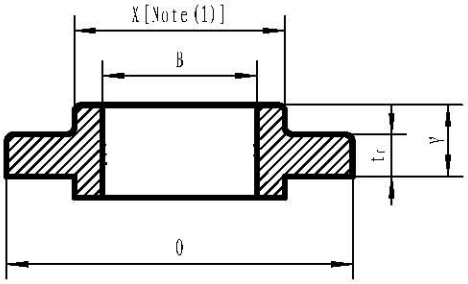

Slip-On Welding

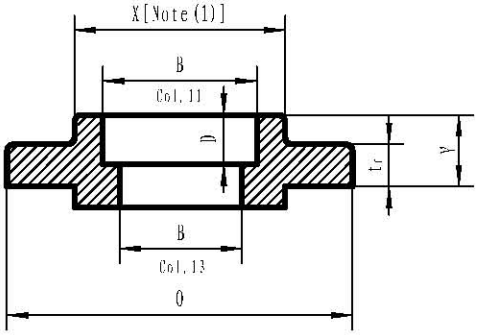

Socket Welding(NPS1/2 to 3 only)

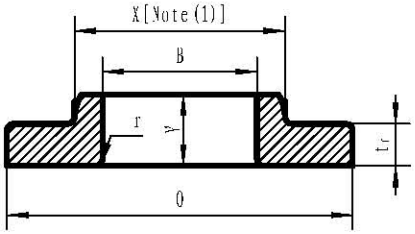

Lapped

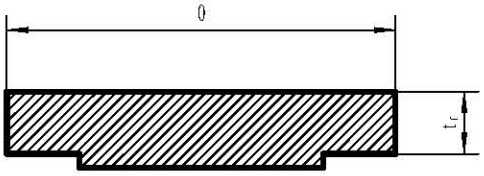

Blind

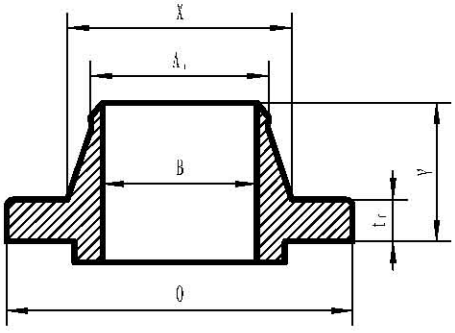

Welding Neck

The preparation of units: Yangzhou Huayu pipe fittings Co., Ltd.

2. CL300 FLANGES

1	2	3	4	5	6	7	8	9	10	11	12	13	14	15	16
						Length Through Hub				Bore					
Nominal Pipe Size, NPS	Outside Diameter of Flange, *O*	Minimum Thickness of Flange, t_f [Notes (2), (3)]	Minimum Thickness Lap Joint, t_f	Diameter of Hub, *X*	Hub Diameter Beginning of Chamfer Welding, Neck, A_h [Note (4)]	Threaded/ Slip-On/ Socket Welding, *Y*	Lapped, *Y*	Welding Neck, *Y*	Minimum Thread Length Threaded, *T* [Note (5)]	Minimum Slip-On/ Socket Welding, *B*	Minimum Lapped, *B*	Welding Neck/ Socket Welding, *B* [Note (6)]	Corner Radius of Bore of Lapped Flange and Pipe, *r*	Minimum Counter-bore Threaded Flange, *Q*	Depth of Socket, *D*
1/2	95	12.7	14.3	38	21.3	21	22	51	16	22.2	22.9	15.8	3	23.6	10
3/4	115	14.3	15.9	48	26.7	24	25	56	16	27.7	28.2	20.9	3	29.0	11
1	125	15.9	17.5	54	33.4	25	27	60	18	34.5	34.9	26.6	3	35.8	13
1 1/4	135	17.5	19.1	64	42.2	25	27	64	21	43.2	43.7	35.1	5	44.4	14
1 1/2	155	19.1	20.7	70	48.3	29	30	67	23	49.5	50.0	40.9	6	50.3	16
2	165	20.7	22.3	84	60.3	32	33	68	29	61.9	62.5	52.5	8	63.5	17
2 1/2	190	23.9	25.4	100	73.0	37	38	75	32	74.6	75.4	62.7	8	76.2	19
3	210	27.0	28.6	117	88.9	41	43	78	32	90.7	91.4	77.9	10	92.2	21
3 1/2	230	28.6	30.2	133	101.6	43	44	79	37	103.4	104.1	90.1	10	104.9	...
4	255	30.2	31.8	146	114.3	46	48	84	37	116.1	116.8	102.3	11	117.6	...
5	280	33.4	35.0	178	141.3	49	51	97	43	143.8	144.4	128.2	11	144.4	...
6	320	35.0	36.6	206	168.3	51	52	97	47	170.7	171.4	154.1	13	171.4	...
8	380	39.7	41.3	260	219.1	60	62	110	51	221.5	222.2	202.7	13	222.2	...
10	445	46.1	47.7	321	273.0	65	95	116	56	276.2	277.4	254.6	13	276.2	...
12	520	49.3	50.8	375	323.8	71	102	129	61	327.0	328.2	304.8	13	328.6	...
14	585	52.4	54.0	425	355.6	75	111	141	64	359.2	360.2	Note (7)	13	360.4	...
16	650	55.6	57.2	483	406.4	81	121	144	69	410.5	411.2	Note (7)	13	411.2	...
18	710	58.8	60.4	533	457.0	87	130	157	70	461.8	462.3	Note (7)	13	462.0	...
20	775	62.0	63.5	587	508.0	94	140	160	74	513.1	514.4	Note (7)	13	512.8	...
24	915	68.3	69.9	702	610.0	105	152	167	83	616.0	616.0	Note (7)	13	614.4	...

Drawing number: HY-CRN-400FL-34-2014

Standard: ASME B16.5

CL400 FLANGES

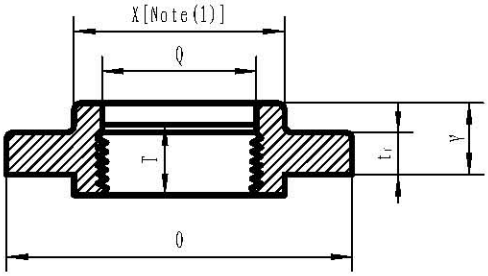

Threaded

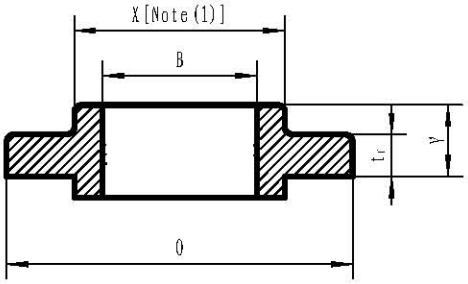

Slip-On Welding

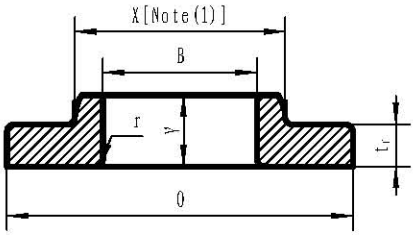

Lapped

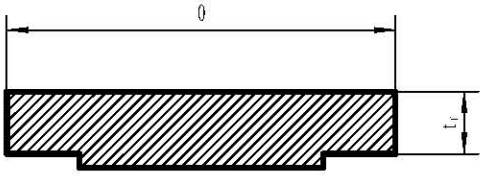

Blind

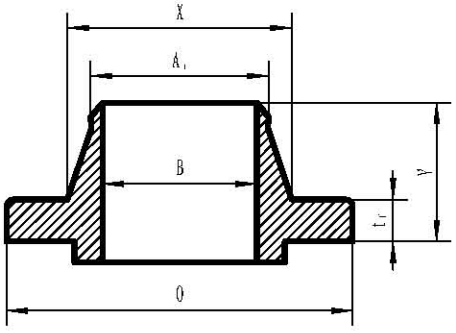

Welding Neck

The preparation of units: Yangzhou Huayu pipe fittings Co., Ltd.

3. CL400 FLANGES

1	2	3	4	5	6	7	8	9	10	11	12	13	14
Nom. Pipe Size, NPS	Outside Diam. of Flange, *O*	Min. Thickness of Flange, t_f	Diam. of Hub, *X*	Hub Diam. Beginning of Chamfer Welding Neck, A_h [Note (2)]	Length Through Hub			Minimum Thread Length Threaded Flange, *T* [Note (3)]	Bore			Corner Bore Radius of Lapped Flange and Pipe, *r*	Minimum Counterbore Threaded Flange, *Q*
					Threaded/ Slip-On, *Y*	Lapped, *Y*	Welding Neck, *Y*		Min. Slip-On, *B*	Min. Lapped, *B*	Welding Neck, *B*		
½ ¾ 1 1¼ 1½ 2 2½ 3 3½	Use Class 600 dimensions in these sizes [Note (4)]												
4	255	35.0	146	114.3	51	51	89	37	116.1	116.8	Note (5)	11	117.6
5	280	38.1	178	141.3	54	54	102	43	143.8	144.5	Note (5)	11	144.4
6	320	41.3	206	168.3	57	57	103	46	170.7	171.4	Note (5)	13	171.4
8	380	47.7	260	219.1	68	68	117	51	221.5	222.2	Note (5)	13	222.2
10	445	54.0	321	273.0	73	102	124	56	276.2	277.4	Note (5)	13	276.2
12	520	57.2	375	323.8	79	108	137	61	327.0	328.2	Note (5)	13	328.6
14	585	60.4	425	355.6	84	117	149	64	359.2	360.2	Note (5)	13	360.4
16	650	63.5	483	406.4	94	127	152	69	410.5	411.2	Note (5)	13	411.2
18	710	66.7	533	457.0	98	137	165	70	461.8	462.3	Note (5)	13	462.0
20	775	69.9	587	508.0	102	146	168	74	513.1	514.4	Note (5)	13	512.8
24	915	76.2	702	610.0	114	159	175	83	616.0	616.0	Note (5)	13	614.4

Drawing number: HY-CRN-600FL-35-2014

Standard: ASME B16.5

CL600 FLANGES

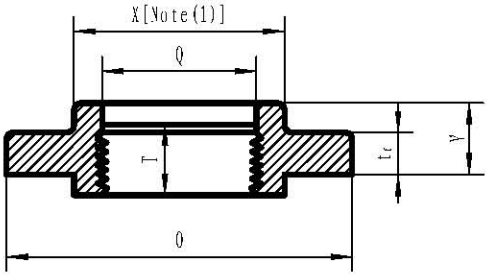

Threaded

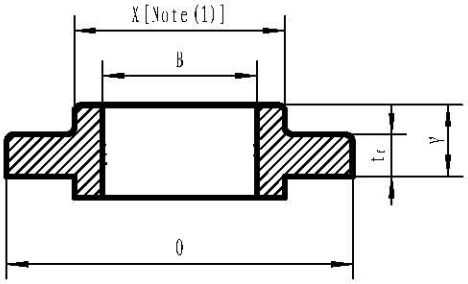

Slip-On Welding

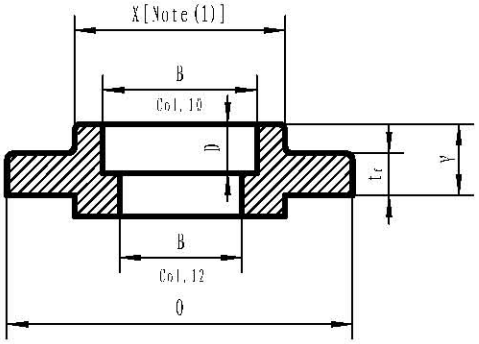

Socket Welding(NPS1/2 to 3 only)

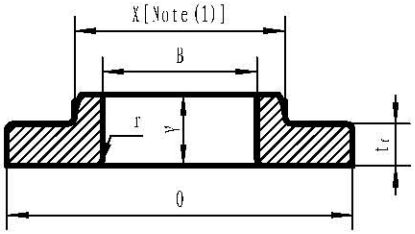

Lapped

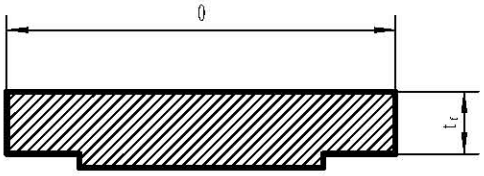

Blind

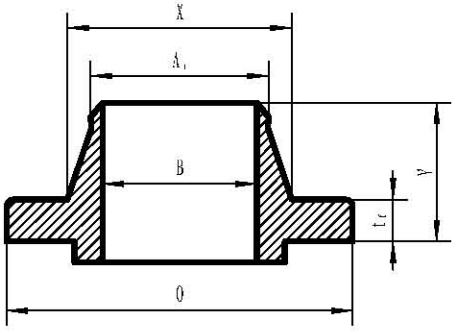

Welding Neck

The preparation of units: Yangzhou Huayu pipe fittings Co., Ltd.

4. CL600 FLANGES

1	2	3	4	5	6	7	8	9	10	11	12	13	14	15
					Length Through Hub			Minimum	Bore			Corner		
Nominal Pipe Size, NPS	Outside Diameter of Flange, *O*	Minimum Thickness of Flange, t_f	Diameter of Hub, *X*	Hub Diameter Beginning of Chamfer Welding Neck, A_h [Note (2)]	Threaded/ Slip-On/ Socket Welding, *Y*	Lapped, *Y*	Welding Neck, *Y*	Thread Length Threaded Flange, *T* [Note (3)]	Minimum Slip-On/ Socket Welding, *B*	Minimum Lapped, *B*	Welding Neck/ Socket Welding, *B*	Bore Radius of Lapped Flange and Pipe, *r*	Minimum Counterbore Threaded Flange, *Q*	Depth of Socket, *D*
½	95	14.3	38	21.3	22	22	52	16	22.2	22.9	Note (4)	3	23.6	10
¾	115	15.9	48	26.7	25	25	57	16	27.7	28.2	Note (4)	3	29.0	11
1	125	17.5	54	33.4	27	27	62	18	34.5	34.9	Note (4)	3	35.8	13
1¼	135	20.7	64	42.2	29	29	67	21	43.2	43.7	Note (4)	5	44.4	14
1½	155	22.3	70	48.3	32	32	70	23	49.5	50.0	Note (4)	6	50.6	16
2	165	25.4	84	60.3	37	37	73	29	61.9	62.5	Note (4)	8	63.5	17
2½	190	28.6	100	73.0	41	41	79	32	74.6	75.4	Note (4)	8	76.2	19
3	210	31.8	117	88.9	46	46	83	35	90.7	91.4	Note (4)	10	92.2	21
3½	230	35.0	133	101.6	49	49	86	40	103.4	104.1	Note (4)	10	104.9	...
4	275	38.1	152	114.3	54	54	102	42	116.1	116.8	Note (4)	11	117.6	...
5	330	44.5	189	141.3	60	60	114	48	143.8	144.4	Note (4)	11	144.4	...
6	355	47.7	222	168.3	67	67	117	51	170.7	171.4	Note (4)	13	171.4	...
8	420	55.6	273	219.1	76	76	133	58	221.5	222.2	Note (4)	13	222.2	...
10	510	63.5	343	273.0	86	111	152	66	276.2	277.4	Note (4)	13	276.2	...
12	560	66.7	400	323.8	92	117	156	70	327.0	328.2	Note (4)	13	328.6	...
14	605	69.9	432	355.6	94	127	165	74	359.2	360.2	Note (4)	13	360.4	...
16	685	76.2	495	406.4	106	140	178	78	410.5	411.2	Note (4)	13	411.2	...
18	745	82.6	546	457.0	117	152	184	80	461.8	462.3	Note (4)	13	462.0	...
20	815	88.9	610	508.0	127	165	190	83	513.1	514.4	Note (4)	13	512.8	...
24	940	101.6	718	610.0	140	184	203	93	616.0	616.0	Note (4)	13	614.4	...

Drawing number: HY-CRN-900FL-36-2014

Standard: ASME B16.5

CL900 FLANGES

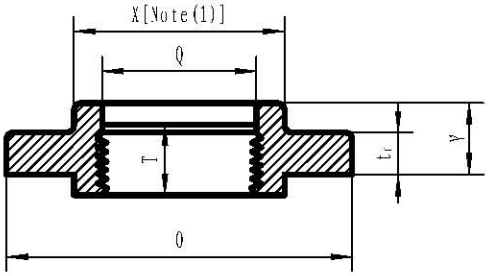

Threaded

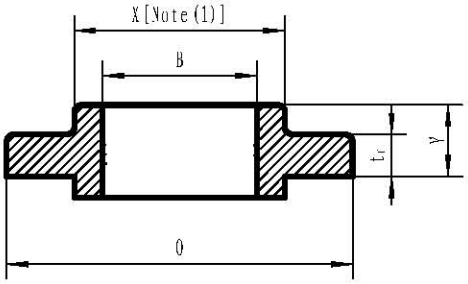

Slip-On Welding

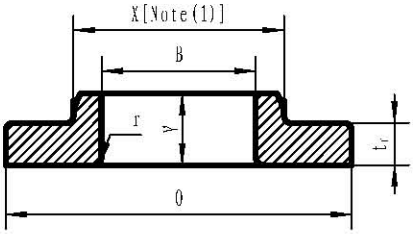

Lapped

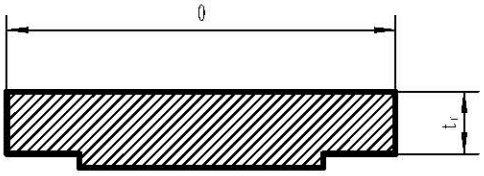

Blind

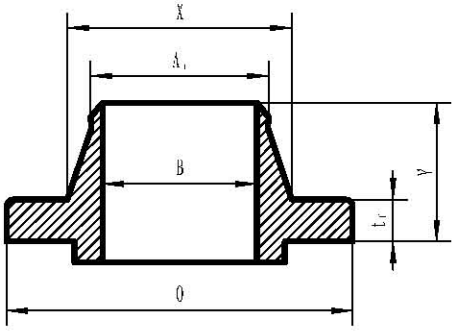

Welding Neck

The preparation of units: Yangzhou Huayu pipe fittings Co., Ltd.

5. CL900 FLANGES

1	2	3	4	5	6	7	8	9	10	11	12	13	14
Nom. Pipe Size, NPS	Outside Diam. of Flange, *O*	Min. Thickness of Flange, t_f	Diam. of Hub, *X*	Hub Diam. Beginning of Chamfer Welding Neck, A_h [Note (2)]	Length Through Hub			Minimum Thread Length Threaded Flange, *T* [Note (3)]	Bore			Corner Bore Radius of Lapped Flange and Pipe, *r*	Minimum Counterbore Threaded Flange, *Q*
					Threaded/ Slip-On, *Y*	Lapped, *Y*	Welding Neck, *Y*		Min. Slip-On, *B*	Min. Lapped, *B*	Welding Neck, *B*		
½ ¾ 1 1¼ 1½ 2 2½	Use Class 1500 dimensions in these sizes [Note (4)]												
3	240	38.1	127	88.9	54	54	102	42	90.7	91.4	Note (5)	10	92.2
4	290	44.5	159	114.3	70	70	114	48	116.1	116.8	Note (5)	11	117.6
5	350	50.8	190	141.3	79	79	127	54	143.8	144.4	Note (5)	11	144.4
6	380	55.6	235	168.3	86	86	140	58	170.7	171.4	Note (5)	13	171.4
8	470	63.5	298	219.1	102	114	162	64	221.5	222.2	Note (5)	13	222.2
10	545	69.9	368	273.0	108	127	184	72	276.2	277.4	Note (5)	13	276.2
12	610	79.4	419	323.8	117	143	200	77	327.0	328.2	Note (5)	13	328.6
14	640	85.8	451	355.6	130	156	213	83	359.2	360.2	Note (5)	13	360.4
16	705	88.9	508	406.4	133	165	216	86	410.5	411.2	Note (5)	13	411.2
18	785	101.6	565	457.0	152	190	229	89	461.8	462.3	Note (5)	13	462.0
20	855	108.0	622	508.0	159	210	248	93	513.1	514.4	Note (5)	13	512.8
24	1,040	139.7	749	610.0	203	267	292	102	616.0	616.0	Note (5)	13	614.4

Drawing number: HY-CRN-1500FL-37-2014

Standard: ASME B16.5

CL1500 FLANGES

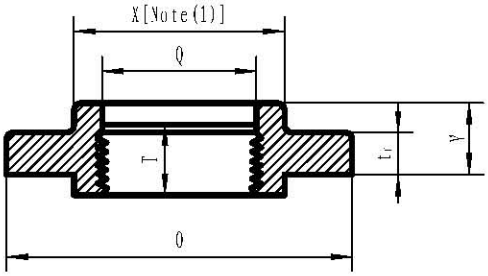

Threaded(NPS1/2 to $2\frac{1}{2}$ only)

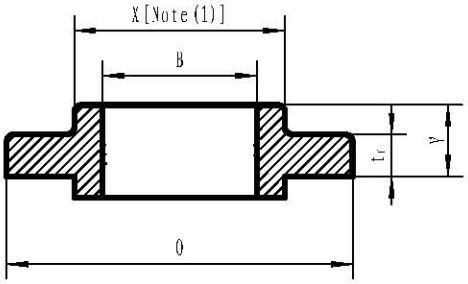

Slip-On Welding(NPS1/2 to $2\frac{1}{2}$ only)

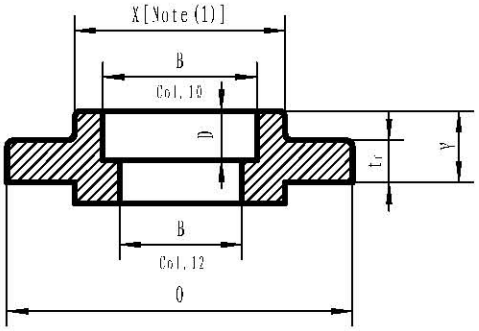

Socket Welding(NPS1/2 to $2\frac{1}{2}$ only)

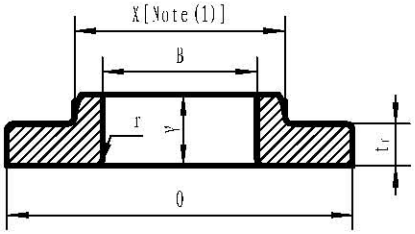

Lapped

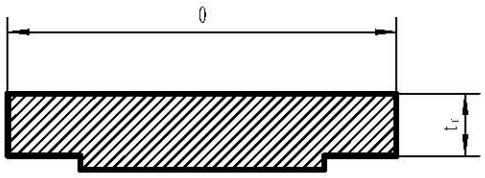

Blind

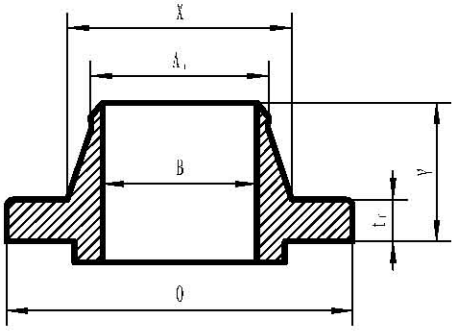

Welding Neck

The preparation of units: Yangzhou Huayu pipe fittings Co., Ltd.

6. CL1500 FLANGES

1	2	3	4	5	6	7	8	9	10	11	12	13	14	15
					Length Through Hub				Bore					
Nominal Pipe Size, NPS	Outside Diameter of Flange, *O*	Minimum Thickness of Flange, t_f	Diameter of Hub, *X*	Hub Diameter Beginning of Chamfer Welding Neck, A_h [Note (2)]	Threaded/ Slip-On/ Socket Welding, *Y*	Lapped, *Y*	Welding Neck, *Y*	Minimum Thread Length Threaded Flange, *T* [Note (3)]	Minimum Slip-On/ Socket Welding, *B*	Minimum Lapped, *B*	Welding Neck/ Socket Welding, *B*	Corner Bore Radius of Lapped Flange and Pipe, *r*	Minimum Counterbore Threaded Flange, *Q*	Depth of Socket, *D*
1/2	120	22.3	38	21.3	32	32	60	23	22.2	22.9	Note (4)	3	23.6	10
3/4	130	25.4	44	26.7	35	35	70	26	27.7	28.2	Note (4)	3	29.0	11
1	150	28.6	52	33.4	41	41	73	29	34.5	34.9	Note (4)	3	35.8	13
1 1/4	160	28.6	64	42.2	41	41	73	31	43.2	43.7	Note (4)	5	44.4	14
1 1/2	180	31.8	70	48.3	44	44	83	32	49.5	50.0	Note (4)	6	50.6	16
2	215	38.1	105	60.3	57	57	102	39	61.9	62.5	Note (4)	8	63.5	17
2 1/2	245	41.3	124	73.0	64	64	105	48	74.6	75.4	Note (4)	8	76.2	19
3	265	47.7	133	88.9	...	73	117	...	...	91.4	Note (4)	10	...	...
4	310	54.0	162	114.3	...	90	124	...	...	116.8	Note (4)	11	...	...
5	375	73.1	197	141.3	...	105	156	...	...	144.4	Note (4)	11	...	...
6	395	82.6	229	168.3	...	119	171	...	...	171.4	Note (4)	13	...	...
8	485	92.1	292	219.1	...	143	213	...	...	222.2	Note (4)	13	...	...
10	585	108.0	368	273.0	...	178	254	...	...	277.4	Note (4)	13	...	...
12	675	123.9	451	323.8	...	219	283	...	...	328.2	Note (4)	13	...	...
14	750	133.4	495	355.6	...	241	298	...	...	360.2	Note (4)	13	...	...
16	825	146.1	552	406.4	...	260	311	...	...	411.2	Note (4)	13	...	...
18	915	162.0	597	457.0	...	276	327	...	...	462.3	Note (4)	13	...	...
20	985	177.8	641	508.0	...	292	356	...	...	514.4	Note (4)	13	...	
24	1 170	203.2	762	610.0	...	330	406	...	...	616.0	Note (4)	13	...	...

Drawing number: HY-CRN-2500FL-38-2014

Standard: ASME B16.5

CL2500 FLANGES

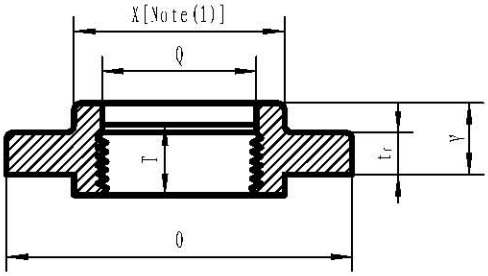

Threaded(NPS1/2 to $2\frac{1}{2}$ only)

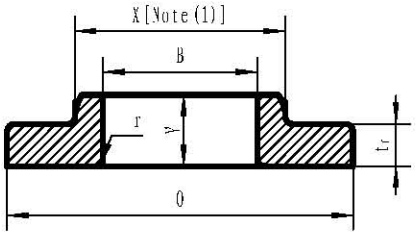

Lapped

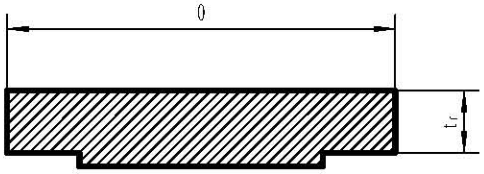

Blind

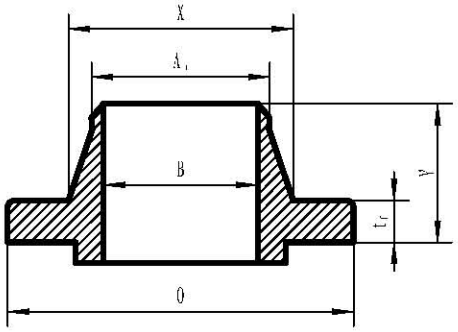

Welding Neck

The preparation of units: Yangzhou Huayu pipe fittings Co., Ltd.

7. CL2500 FLANGES

1	2	3	4	5	6	7	8	9	10	11	12	13
Nom. Pipe Size, NPS	Outside Diam. of Flange, *O*	Min. Thickness of Flange, t_f	Diam. of Hub, *X*	Hub Diam. Beginning of Chamfer Welding Neck, A_h [Note (2)]	Length Through Hub			Minimum Thread Length Threaded Flange, *T* [Note (3)]	Bore		Corner Bore Radius of Lapped Flange and Pipe, *r*	Minimum Counterbore Threaded Flange, *Q*
					Threaded, *Y*	Lapped, *Y*	Welding Neck, *Y*		Min. Lapped, *B*	Welding Neck, *B*		
½	135	30.2	43	21.3	40	40	73	29	22.9	Note (4)	3	23.6
¾	140	31.8	51	26.7	43	43	79	32	28.2	Note (4)	3	29.0
1	160	35.0	57	33.4	48	48	89	35	34.9	Note (4)	3	35.8
1¼	185	38.1	73	42.2	52	52	95	39	43.7	Note (4)	5	44.4
1½	205	44.5	79	48.3	60	60	111	45	50.0	Note (4)	6	50.6
2	235	50.9	95	60.3	70	70	127	51	62.5	Note (4)	8	63.5
2½	265	57.2	114	73.0	79	79	143	58	75.4	Note (4)	8	76.2
3	305	66.7	133	88.9	...	92	168	...	91.4	Note (4)	10	...
4	355	76.2	165	114.3	...	108	190	...	116.8	Note (4)	11	...
5	420	92.1	203	141.3	...	130	229	...	144.4	Note (4)	11	...
6	485	108.0	235	168.3	...	152	273	...	171.4	Note (4)	13	...
8	550	127.0	305	219.1	...	178	318	...	222.2	Note (4)	13	...
10	675	165.1	375	273.0	...	229	419	...	277.4	Note (4)	13	...
12	760	184.2	441	323.8	...	254	464	...	328.2	Note (4)	13	...

法兰类型、规格及尺寸参数

FLANGE TYPE, SPECIFICATIONAND SIZE PARAMETERS

（ASME B16.47）

编　制 PREPARATION:

审　核 REVIEWED:

批　准 APPROVED:

扬州华宇管件有限公司

YANGZHOU HUAYU PIPE FITTING CO., LTD

Drawing number: HY-CRN-150A-16-2014

Standard: ASME B16.47

Dimensions of Class 150 Series A Flanges

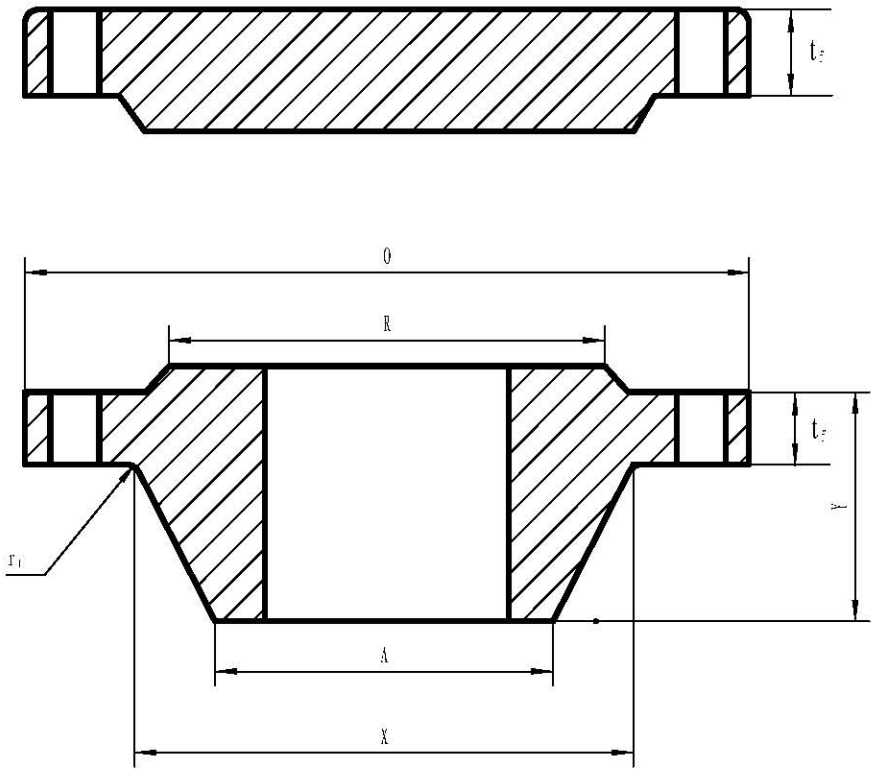

The preparation of units: Yangzhou Huayu pipe fittings Co., Ltd.

ASME B16.47

1. Dimensions of Class 150 Series A Flanges

Nominal Pipe Size	O.D. of Flange, *O*	Minimum Thickness of Flange, t_f [Note (1)]		Length Through Hub, *Y*	Diam. of Hub, *X* [Note (2)]	Hub Diam. Top, *A* [Note (3)]	Raised Face Diam., *R*	Drilling			Diam. of Bolt, in.	Minimum Fillet Radius, r_1
		WNF	Blind					Diam. of Bolt Circle	No. of Bolt Holes	Diam. of Bolt Hole, in.		
26	870	66.7	66.7	119	676	660.4	749	806.4	24	1 3/8	1 1/4	10
28	925	69.9	69.9	124	727	711.2	800	863.6	28	1 3/8	1 1/4	11
30	985	73.1	73.1	135	781	762.0	857	914.4	28	1 3/8	1 1/4	11
32	1 060	79.4	79.4	143	832	812.8	914	977.9	28	1 5/8	1 1/2	11
34	1 110	81.0	81.0	148	883	863.6	965	1 028.7	32	1 5/8	1 1/2	13
36	1 170	88.9	88.9	156	933	914.4	1 022	1 085.8	32	1 5/8	1 1/2	13
38	1 240	85.8	85.8	156	991	965.2	1 073	1 149.4	32	1 5/8	1 1/2	13
40	1 290	88.9	88.9	162	1 041	1 016.0	1 124	1 200.2	36	1 5/8	1 1/2	13
42	1 345	95.3	95.3	170	1 092	1 066.8	1 194	1 257.3	36	1 5/8	1 1/2	13
44	1 405	100.1	100.1	176	1 143	1 117.6	1 245	1 314.4	40	1 5/8	1 1/2	13
46	1 455	101.6	101.6	184	1 197	1 168.4	1 295	1 365.2	40	1 5/8	1 1/2	13
48	1 510	106.4	106.4	191	1 248	1 219.2	1 359	1 422.4	44	1 5/8	1 1/2	13
50	1 570	109.6	109.6	202	1 302	1 270.0	1 410	1 479.6	44	1 7/8	1 3/4	13
52	1 625	114.3	114.3	208	1 353	1 320.8	1 461	1 536.7	44	1 7/8	1 3/4	13
54	1 685	119.1	119.1	214	1 403	1 371.6	1 511	1 593.8	44	1 7/8	1 3/4	13
56	1 745	122.3	122.3	227	1 457	1 422.4	1 575	1 651.0	48	1 7/8	1 3/4	13
58	1 805	127.0	127.0	233	1 508	1 473.2	1 626	1 708.2	48	1 7/8	1 3/4	13
60	1 855	130.2	130.2	238	1 559	1 524.0	1 676	1 759.0	52	1 7/8	1 3/4	13

Drawing number: HY-CRN-300A-17-2014

Standard: ASME B16.47

Dimensions of Class 300 Series A Flanges

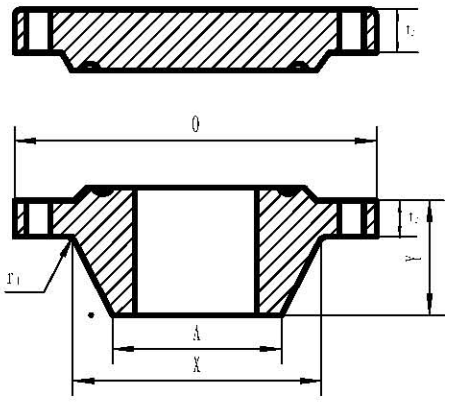

Ring Joint

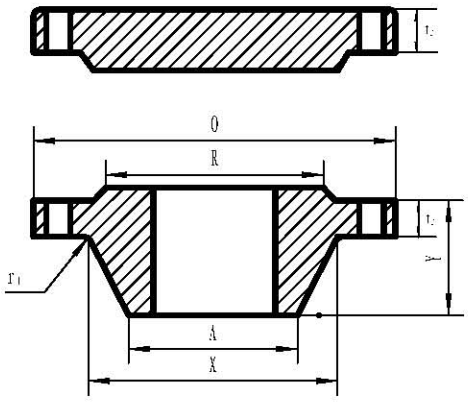

Ralsed Face

The preparation of units: Yangzhou Huayu pipe fittings Co., Ltd.

2. Dimensions of Class 300 Series A Flanges

Nominal Pipe Size	O.D. of Flange, *O*	Minimum Thickness of Flange, t_f [Note (1)]		Length Through Hub, *Y*	Diam. of Hub, *X* [Note (2)]	Hub Diam. Top, *A* [Note (3)]	Raised Face Diam., *R*	Drilling			Diam. of Bolt, in.	Minimum Fillet Radius, r_1
		WNF	Blind					Diam. of Bolt Circle	No. of Bolt Holes	Diam. of Bolt Hole, in.		
26	970	77.8	82.6	183	721	660.4	749	876.3	28	1¾	1⅝	10
28	1 035	84.2	88.9	195	775	711.2	800	939.8	28	1¾	1⅝	11
30	1 090	90.5	93.7	208	827	762.0	857	997.0	28	1⅞	1¾	11
32	1 150	96.9	98.5	221	881	812.8	914	1 054.1	28	2	1⅞	11
34	1 205	100.1	103.2	230	937	863.6	965	1 104.9	28	2	1⅞	13
36	1 270	103.2	109.6	240	991	914.4	1 022	1 168.4	32	2⅛	2	13
38	1 170	106.4	106.4	179	994	965.2	1 029	1 092.2	32	1⅝	1½	13
40	1 240	112.8	112.8	192	1 048	1 016.0	1 086	1 155.7	32	1¾	1⅝	13
42	1 290	117.5	117.5	198	1 099	1 066.8	1 137	1 206.5	32	1¾	1⅝	13
44	1 355	122.3	122.3	205	1 149	1 117.6	1 194	1 263.6	32	1⅞	1¾	13
46	1 415	127.0	127.0	214	1 203	1 168.4	1 245	1 320.8	28	2	1⅞	13
48	1 465	131.8	131.8	222	1 254	1 219.2	1 302	1 371.6	32	2	1⅞	13
50	1 530	138.2	138.2	230	1 305	1 270.0	1 359	1 428.8	32	2⅛	2	13
52	1 580	142.9	142.9	237	1 356	1 320.8	1 410	1 479.6	32	2⅛	2	13
54	1 660	150.9	150.9	251	1 410	1 371.6	1 467	1 549.4	28	2⅜	2¼	13
56	1 710	152.4	152.4	259	1 464	1 422.4	1 518	1 600.2	28	2⅜	2¼	13
58	1 760	157.2	157.2	265	1 514	1 473.2	1 575	1 651.0	32	2⅜	2¼	13
60	1 810	162.0	162.0	271	1 565	1 524.0	1 626	1 701.8	32	2⅜	2¼	13

Drawing number: HY-CRN-400A-18-2014

Standard: ASME B16.47

Dimensions of Class 400 Series A Flanges

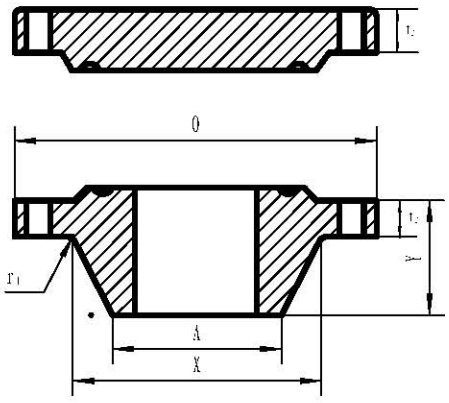

Ring Joint

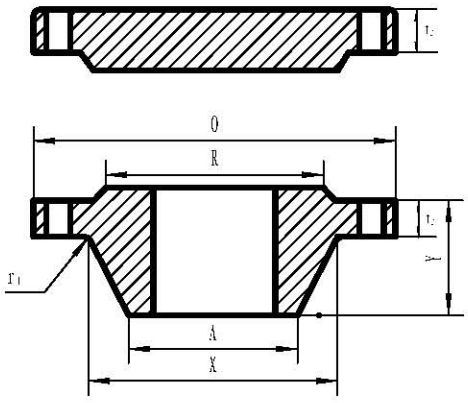

Ralsed Face

The preparation of units: Yangzhou Huayu pipe fittings Co., Ltd.

3. Dimensions of Class 400 Series A Flanges

Nominal Pipe Size	O.D. of Flange, *O*	Minimum Thickness of Flange, t_f [Note (1)]		Length Through Hub, *Y*	Diam. of Hub, *X* [Note (2)]	Hub Diam. Top, *A* [Note (3)]	Raised Face Diam., *R*	Drilling			Diam. of Bolt, in.	Minimum Fillet Radius, r_1
		WNF	Blind					Diam. of Bolt Circle	No. of Bolt Holes	Diam. of Bolt Hole, in.		
26	970	88.9	98.5	194	727	660.4	749	876.3	28	1 7/8	1 3/4	11
28	1 035	95.3	104.8	206	783	711.2	800	939.8	28	2	1 7/8	13
30	1 090	101.6	111.2	219	837	762.0	857	997.0	28	2 1/8	2	13
32	1 150	108.0	115.9	232	889	812.8	914	1 054.1	28	2 1/8	2	13
34	1 205	111.2	122.3	241	945	863.6	965	1 104.9	28	2 1/8	2	14
36	1 270	114.3	128.6	251	1 000	914.4	1 022	1 168.4	32	2 1/8	2	14
38	1 205	123.9	123.9	206	1 003	965.2	1 035	1 117.6	32	1 7/8	1 3/4	14
40	1 270	130.2	130.2	216	1 054	1 016.0	1 092	1 174.8	32	2	1 7/8	14
42	1 320	133.4	133.4	224	1 108	1 066.8	1 143	1 225.6	32	2	1 7/8	14
44	1 385	139.7	139.7	233	1 159	1 117.6	1 200	1 282.7	32	2 1/8	2	14
46	1 440	146.1	146.1	244	1 213	1 168.4	1 257	1 339.8	36	2 1/8	2	14
48	1 510	152.4	152.4	257	1 267	1 219.2	1 308	1 403.4	28	2 3/8	2 1/4	14
50	1 570	157.2	158.8	268	1 321	1 270.0	1 362	1 460.5	32	2 3/8	2 1/4	14
52	1 620	162.0	163.6	276	1 372	1 320.8	1 413	1 511.3	32	2 3/8	2 1/4	14
54	1 700	169.9	171.5	289	1 426	1 371.6	1 470	1 581.2	28	2 5/8	2 1/2	14
56	1 755	174.7	176.3	298	1 480	1 422.4	1 527	1 632.0	32	2 5/8	2 1/2	14
58	1 805	177.8	181.0	306	1 530	1 473.2	1 578	1 682.8	32	2 5/8	2 1/2	14
60	1 885	185.8	189.0	319	1 584	1 524.0	1 635	1 752.6	32	2 7/8	2 3/4	14

Drawing number: HY-CRN-600A-19-2014

Standard: ASME B16.47

Dimensions of Class 600 Series A Flanges

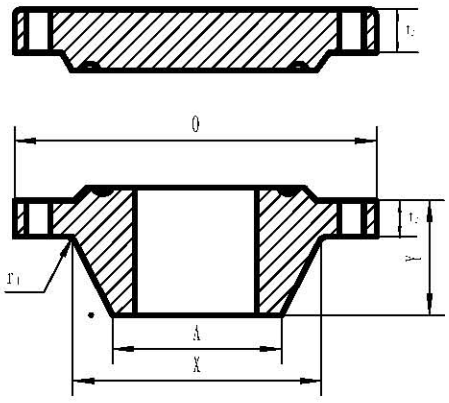

Ring Joint

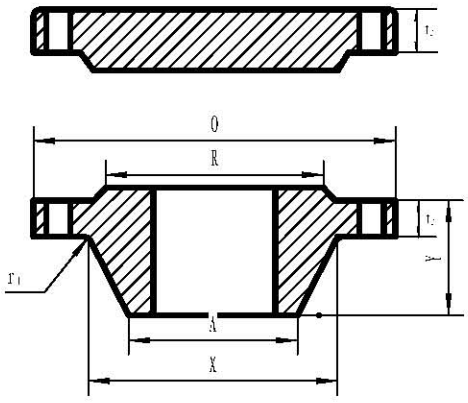

Ralsed Face

The preparation of units: Yangzhou Huayu pipe fittings Co., Ltd.

4. Dimensions of Class 600 Series A Flanges

Nominal Pipe Size	O.D. of Flange, *O*	Minimum Thickness of Flange, t_f [Note (1)]		Length Through Hub, *Y*	Diam. of Hub, *X* [Note (2)]	Hub Diam. Top, *A* [Note (3)]	Raised Face Diam., *R*	Drilling			Diam. of Bolt, in.	Minimum Fillet Radius, r_1
		WNF	Blind					Diam. of Bolt Circle	No. of Bolt Holes	Diam. of Bolt Hole, in.		
26	1 015	108.0	125.5	222	748	660.4	749	914.4	28	2	1 7/8	13
28	1 075	111.2	131.8	235	803	711.2	800	965.2	28	2 1/8	2	13
30	1 130	114.3	139.7	248	862	762.0	857	1 022.4	28	2 1/8	2	13
32	1 195	117.5	147.7	260	918	812.8	914	1 079.5	28	2 3/8	2 1/4	13
34	1 245	120.7	154.0	270	973	863.6	965	1 130.3	28	2 3/8	2 1/4	14
36	1 315	123.9	162.0	283	1 032	914.4	1 022	1 193.8	28	2 5/8	2 1/2	14
38	1 270	152.4	155.0	254	1 022	965.2	1 054	1 162.0	28	2 3/8	2 1/4	14
40	1 320	158.8	162.0	264	1 073	1 016.0	1 111	1 212.8	32	2 3/8	2 1/4	14
42	1 405	168.3	171.5	279	1 127	1 066.8	1 168	1 282.7	28	2 5/8	2 1/2	14
44	1 455	173.1	177.8	289	1 181	1 117.6	1 226	1 333.5	32	2 5/8	2 1/2	14
46	1 510	179.4	185.8	300	1 235	1 168.4	1 276	1 390.6	32	2 5/8	2 1/2	14
48	1 595	189.0	195.3	316	1 289	1 219.2	1 334	1 460.5	32	2 7/8	2 3/4	14
50	1 670	196.9	203.2	329	1 343	1 270.0	1 384	1 524.0	28	3 1/8	3	14
52	1 720	203.2	209.6	337	1 394	1 320.8	1 435	1 574.8	32	3 1/8	3	14
54	1 780	209.6	217.5	349	1 448	1 371.6	1 492	1 632.0	32	3 1/8	3	14
56	1 855	217.5	225.5	362	1 502	1 422.4	1 543	1 695.4	32	3 3/8	3 1/4	16
58	1 905	222.3	231.8	370	1 553	1 473.2	1 600	1 746.2	32	3 3/8	3 1/4	16
60	1 995	233.4	242.9	389	1 610	1 524.0	1 657	1 822.4	28	3 5/8	3 1/2	17

Drawing number: HY-CRN-900A-20-2014

Standard: ASME B16.47

Dimensions of Class 900 Series A Flanges

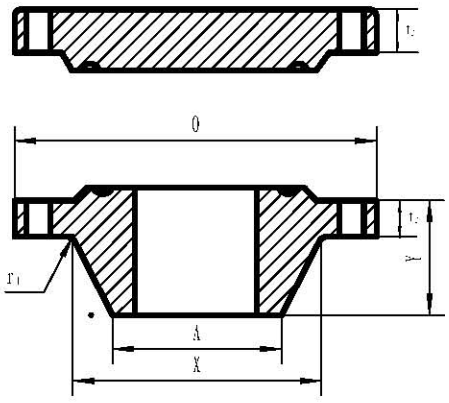

Ring Joint

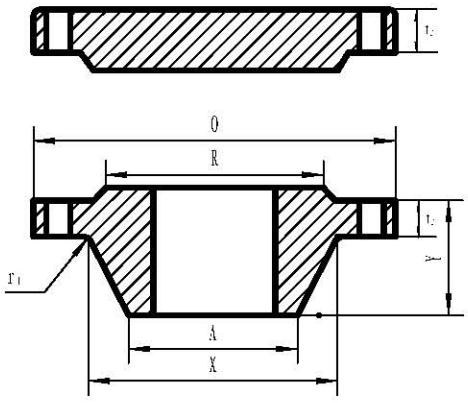

Ralsed Face

The preparation of units: Yangzhou Huayu pipe fittings Co., Ltd.

5. Dimensions of Class 900 Series A Flanges

Nominal Pipe Size	O.D. of Flange, *O*	Minimum Thickness of Flange, t_f [Note (1)]		Length Through Hub, *Y*	Diam. of Hub, *X* [Note (2)]	Hub Diam. Top, *A* [Note (3)]	Raised Face Diam., *R*	Drilling			Diam. of Bolt, in.	Minimum Fillet Radius, r_1
		WNF	Blind					Diam. of Bolt Circle	No. of Bolt Holes	Diam. of Bolt Hole, in.		
26	1 085	139.7	160.4	286	775	660.4	749	952.5	20	$2\frac{7}{8}$	$2\frac{3}{4}$	11
28	1 170	142.9	171.5	298	832	711.2	800	1 022.4	20	$3\frac{1}{8}$	3	13
30	1 230	149.3	182.6	311	889	762.0	857	1 085.8	20	$3\frac{1}{8}$	3	13
32	1 315	158.8	193.7	330	946	812.8	914	1 155.7	20	$3\frac{3}{8}$	$3\frac{1}{4}$	13
34	1 395	165.1	204.8	349	1 006	863.6	965	1 225.6	20	$3\frac{5}{8}$	$3\frac{1}{2}$	14
36	1 460	171.5	214.4	362	1 064	914.4	1 022	1 289.0	20	$3\frac{5}{8}$	$3\frac{1}{2}$	14
38	1 460	190.5	215.9	352	1 073	965.2	1 099	1 289.0	20	$3\frac{5}{8}$	$3\frac{1}{2}$	19
40	1 510	196.9	223.9	364	1 127	1 016.0	1 162	1 339.8	24	$3\frac{5}{8}$	$3\frac{1}{2}$	21
42	1 560	206.4	231.8	371	1 176	1 066.8	1 213	1 390.6	24	$3\frac{5}{8}$	$3\frac{1}{2}$	21
44	1 650	214.4	242.9	391	1 235	1 117.6	1 270	1 463.7	24	$3\frac{7}{8}$	$3\frac{3}{4}$	22
46	1 735	225.5	255.6	411	1 292	1 168.4	1 334	1 536.7	24	$4\frac{1}{8}$	4	22
48	1 785	233.4	263.6	419	1 343	1 219.2	1 384	1 587.5	24	$4\frac{1}{8}$	4	24
50	...	...	...	...	...	...	...	...	...	...	...	...
52	...	...	...	...	...	...	...	...	...	...	...	...
54	...	...	...	...	...	...	...	...	...	...	...	...
56	...	...	...	...	...	...	...	...	...	...	...	...
58	...	...	...	...	...	...	...	...	...	...	...	...
60	...	...	...	...	...	...	...	...	...	...	...	...

Drawing number: HY-CRN-75B-21-2014

Standard: ASME B16.47

Dimensions of Class 75 Series B Flanges

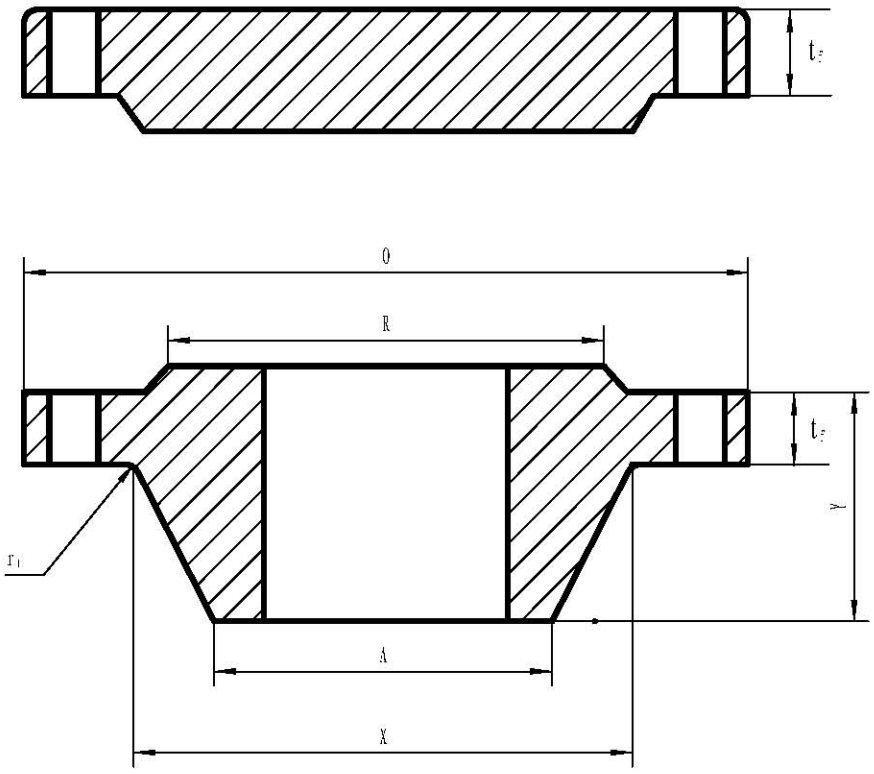

The preparation of units: Yangzhou Huayu pipe fittings Co., Ltd.

6. Dimensions of Class 75 Series B Flanges

Nominal Pipe Size	O.D. of Flange, *O*	Minimum Thickness of Flange, t_f [Note (1)]		Length Through Hub, *Y*	Diam. of Hub, *X* [Note (2)]	Hub Diam. Top, *A* [Note (3)]	Raised Face Diam., *R*	Drilling			Diam. of Bolt, in.	Minimum Fillet Radius, r_1
		WNF	Blind					Diam. of Bolt Circle	No. of Bolt Holes	Diam. of Bolt Hole, in.		
26	760	31.9	31.9	57	676	661.9	705	723.9	36	3/4	5/8	8
28	815	31.9	31.9	60	727	712.7	756	774.7	40	3/4	5/8	8
30	865	31.9	31.9	64	778	763.5	806	825.5	44	3/4	5/8	8
32	915	33.5	35.0	68	829	814.3	857	876.3	48	3/4	5/8	8
34	965	33.5	36.6	72	879	865.1	908	927.1	52	3/4	5/8	8
36	1 035	35.0	40.9	84	935	915.9	965	992.2	40	7/8	3/4	10
38	1 085	36.6	43.0	87	986	966.7	1 016	1 043.0	40	7/8	3/4	10
40	1 135	36.6	43.0	91	1 037	1 017.5	1 067	1 093.8	44	7/8	3/4	10
42	1 185	38.2	46.3	94	1 087	1 068.3	1 118	1 144.6	48	7/8	3/4	10
44	1 250	41.4	47.7	103	1 140	1 119.1	1 175	1 203.3	36	1	7/8	10
46	1 300	43.0	49.3	106	1 191	1 169.9	1 226	1 254.1	40	1	7/8	10
48	1 355	44.6	52.5	110	1 241	1 220.7	1 276	1 304.9	44	1	7/8	10
50	1 405	46.2	54.1	114	1 294	1 271.5	1 327	1 355.7	44	1	7/8	10
52	1 455	46.2	55.7	119	1 345	1 322.3	1 378	1 409.7	48	1	7/8	10
54	1 510	47.8	58.9	124	1 397	1 373.1	1 429	1 460.5	48	1	7/8	10
56	1 575	49.3	60.4	133	1 451	1 423.9	1 486	1 520.8	40	1 1/8	1	11
58	1 625	50.9	62.0	137	1 502	1 474.7	1 537	1 571.6	44	1 1/8	1	11
60	1 675	54.1	65.2	143	1 553	1 525.5	1 588	1 622.4	44	1 1/8	1	11

Drawing number: HY-CRN-150B-22-2014

Standard: ASME B16.47

Dimensions of Class 150 Series B Flanges

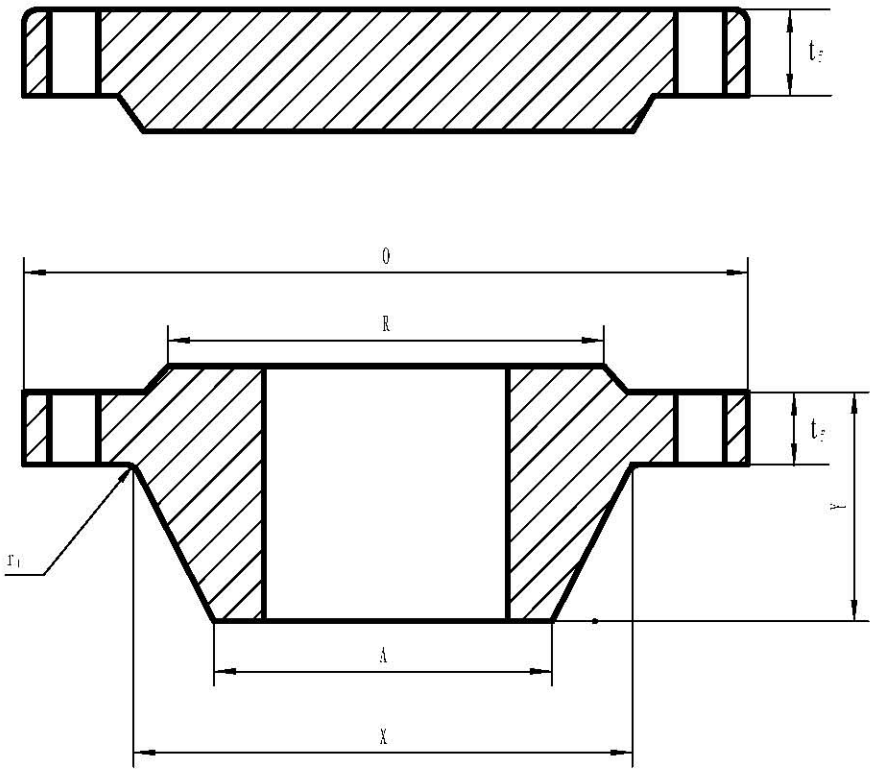

The preparation of units: Yangzhou Huayu pipe fittings Co., Ltd.

7. Dimensions of Class 150 Series B Flanges

Nominal Pipe Size	O.D. of Flange, *O*	Minimum Thickness of Flange, t_f [Note (1)]		Length Through Hub, *Y*	Diam. of Hub, *X* [Note (2)]	Hub Diam. Top, *A* [Note (3)]	Raised Face Diam., *R*	Drilling			Diam. of Bolt, in.	Minimum Fillet Radius, r_1
		WNF	Blind					Diam. of Bolt Circle	No. of Bolt Holes	Diam. of Bolt Hole, in.		
26	785	39.8	43.0	87	684	661.9	711	744.5	36	7/8	3/4	10
28	835	43.0	46.2	94	735	712.7	762	795.3	40	7/8	3/4	10
30	885	43.0	49.3	98	787	763.5	813	846.1	44	7/8	3/4	10
32	940	44.6	52.5	106	840	814.3	864	900.1	48	7/8	3/4	10
34	1 005	47.7	55.7	109	892	865.1	921	957.3	40	1	7/8	10
36	1 055	50.9	57.3	116	945	915.9	972	1 009.6	44	1	7/8	10
38	1 125	52.5	62.0	122	997	968.2	1 022	1 070.0	40	1 1/8	1	10
40	1 175	54.1	65.2	127	1 049	1 019.0	1 080	1 120.8	44	1 1/8	1	10
42	1 225	57.3	66.8	132	1 102	1 069.8	1 130	1 171.6	48	1 1/8	1	11
44	1 275	58.9	70.0	135	1 153	1 120.6	1 181	1 222.4	52	1 1/8	1	11
46	1 340	60.4	73.1	143	1 205	1 171.4	1 235	1 284.3	40	1 1/4	1 1/8	11
48	1 390	63.6	76.3	148	1 257	1 222.2	1 289	1 335.1	44	1 1/4	1 1/8	11
50	1 445	66.8	79.5	152	1 308	1 273.0	1 340	1 385.9	48	1 1/4	1 1/8	11
52	1 495	68.4	82.7	156	1 360	1 323.8	1 391	1 436.7	52	1 1/4	1 1/8	11
54	1 550	70.0	85.8	160	1 413	1 374.6	1 441	1 492.2	56	1 1/4	1 1/8	11
56	1 600	71.6	89.0	165	1 465	1 425.4	1 492	1 543.0	60	1 1/4	1 1/8	14
58	1 675	73.1	91.9	173	1 516	1 476.2	1 543	1 611.3	48	1 3/8	1 1/4	14
60	1 725	74.7	95.4	178	1 570	1 527.0	1 600	1 662.1	52	1 3/8	1 1/4	14

Drawing number: HY-CRN-300B-23-2014

Standard: ASME B16.47

Dimensions of Class 300 Series B Flanges

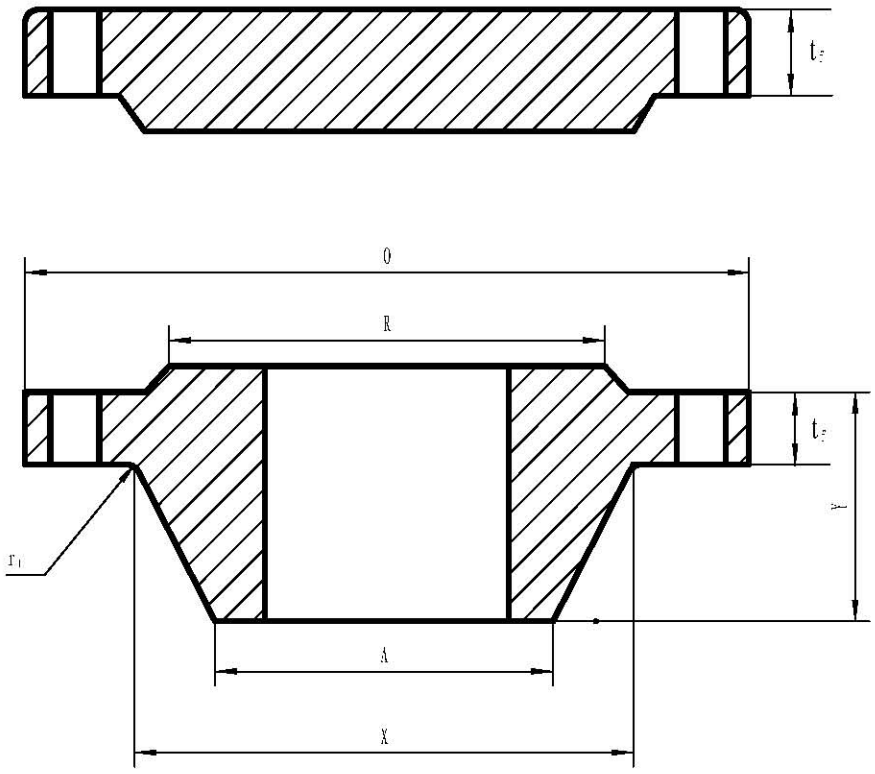

The preparation of units: Yangzhou Huayu pipe fittings Co., Ltd.

8. Dimensions of Class 300 Series B Flanges

Nominal Pipe Size	O.D. of Flange, *O*	Minimum Thickness of Flange, t_f [Note (1)]		Length Through Hub, *Y*	Diam. of Hub, *X* [Note (2)]	Hub Diam. Top, *A* [Note (3)]	Raised Face Diam., *R*	Drilling			Diam. of Bolt, in.	Minimum Fillet Radius, r_1
		WNF	Blind					Diam. of Bolt Circle	No. of Bolt Holes	Diam. of Bolt Hole, in.		
26	865	87.4	87.4	168	702	665.2	737	803.3	32	1 3/8	1 1/4	14
28	920	87.4	87.4	148	756	716.0	787	857.2	36	1 3/8	1 1/4	14
30	990	92.1	92.1	156	813	768.4	845	920.8	36	1 1/2	1 3/8	14
32	1 055	101.6	101.6	167	864	819.2	902	977.9	32	1 5/8	1 1/2	16
34	1 110	101.6	101.6	171	918	870.0	953	1 031.9	36	1 5/8	1 1/2	16
36	1 170	101.6	101.6	179	965	920.8	1 010	1 089.0	32	1 3/4	1 5/8	16
38	1 220	109.6	109.6	165	1 016	971.6	1 060	1 139.8	36	1 3/4	1 5/8	16
40	1 275	114.3	114.3	197	1 067	1 022.4	1 114	1 190.6	40	1 3/4	1 5/8	16
42	1 335	117.5	117.5	203	1 118	1 074.7	1 168	1 244.6	36	1 7/8	1 3/4	16
44	1 385	125.5	125.5	213	1 173	1 125.5	1 219	1 295.4	40	1 7/8	1 3/4	16
46	1 460	127.0	128.6	221	1 229	1 176.3	1 270	1 365.2	36	2	1 7/8	16
48	1 510	127.0	133.4	222	1 278	1 227.1	1 327	1 416.0	40	2	1 7/8	16
50	1 560	136.6	138.2	233	1 330	1 277.9	1 378	1 466.8	44	2	1 7/8	16
52	1 615	141.3	142.6	241	1 383	1 328.7	1 429	1 517.6	48	2	1 7/8	16
54	1 675	135.0	147.7	238	1 435	1 379.5	1 480	1 578.0	48	2	1 7/8	16
56	1 765	152.4	155.4	267	1 494	1 430.3	1 537	1 651.0	36	2 3/8	2 1/4	17
58	1 825	152.4	160.4	273	1 548	1 481.1	1 594	1 712.9	40	2 3/8	2 1/4	17
60	1 880	149.3	165.1	270	1 599	1 557.3	1 651	1 763.7	40	2 3/8	2 1/4	17

Drawing number: HY-CRN-400B-24-2014

Standard: ASME B16.47

Dimensions of Class 400 Series B Flanges

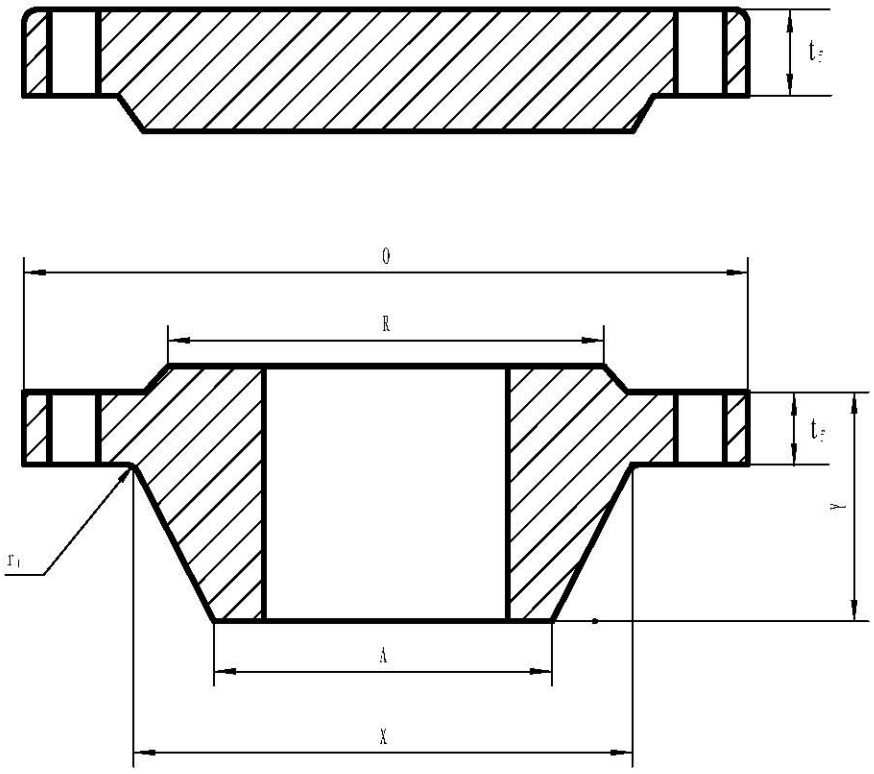

The preparation of units: Yangzhou Huayu pipe fittings Co., Ltd.

9. Dimensions of Class 400 Series B Flanges

Nominal Pipe Size	O.D. of Flange, *O*	Minimum Thickness of Flange, t_f [Note (1)]		Length Through Hub, *Y*	Diam. of Hub, *X* [Note (2)]	Hub Diam. Top, *A* [Note (3)]	Raised Face Diam., *R*	Drilling			Diam. of Bolt, in.	Minimum Fillet Radius, r_1
		WNF	Blind					Diam. of Bolt Circle	No. of Bolt Holes	Diam. of Bolt Hole, in.		
26	850	88.9	88.9	149	689	660.4	711	781.0	28	1½	1⅜	11
28	915	95.3	95.3	159	740	711.2	762	838.2	24	1⅝	1½	13
30	970	101.6	101.6	170	794	762.0	819	895.4	28	1⅝	1½	13
32	1 035	108.0	108.0	179	845	812.8	873	952.5	28	1¾	1⅝	13
34	1 085	111.2	111.2	187	899	863.6	927	1 003.3	32	1¾	1⅝	14
36	1 155	119.1	119.1	200	952	914.4	981	1 066.8	28	1⅞	1¾	14
38	...	...	...	...	...	...	...	...	...	...	...	...
40	...	...	...	...	...	...	...	...	...	...	...	...
42	...	...	...	...	...	...	...	...	...	...	...	...
44	...	...	...	...	...	...	...	...	...	...	...	...
46	...	...	...	...	...	...	...	...	...	...	...	...
48	...	...	...	...	...	...	...	...	...	...	...	...
50	...	...	...	...	...	...	...	...	...	...	...	...
52	...	...	...	...	...	...	...	...	...	...	...	...
54	...	...	...	...	...	...	...	...	...	...	...	...
56	...	...	...	...	...	...	...	...	...	...	...	...
58	...	...	...	...	...	...	...	...	...	...	...	...
60	...	...	...	...	...	...	...	...	...	...	...	...

Drawing number: HY-CRN-600B-25-2014

Standard: ASME B16.47

Dimensions of Class 600 Series B Flanges

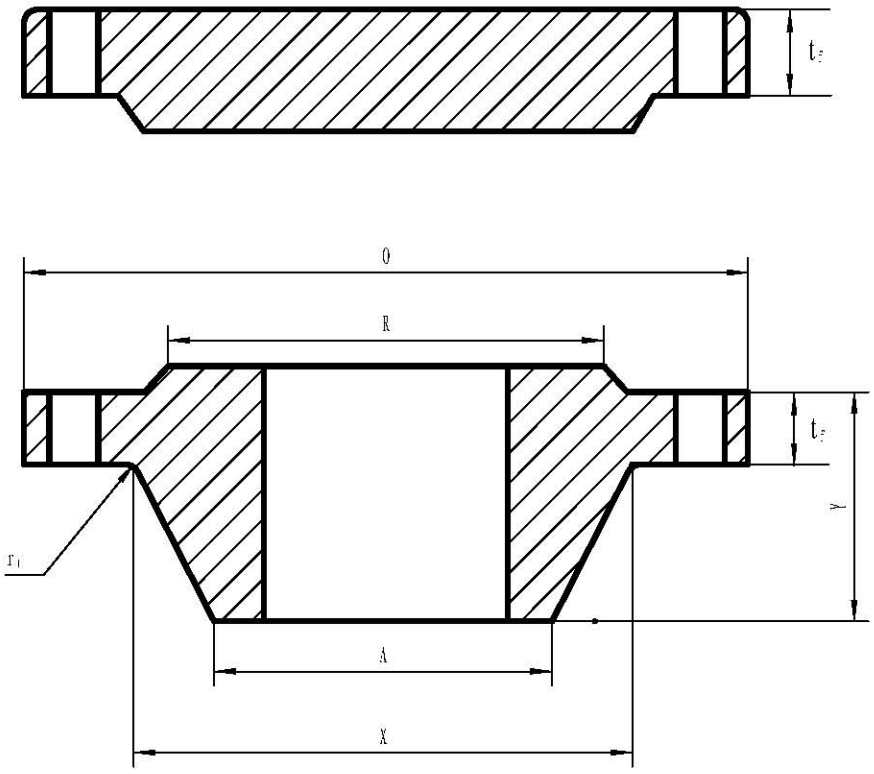

The preparation of units: Yangzhou Huayu pipe fittings Co., Ltd.

10. Dimensions of Class 600 Series B Flanges

Nominal Pipe Size	O.D. of Flange, *O*	Minimum Thickness of Flange, t_f [Note (1)]		Length Through Hub, *Y*	Diam. of Hub, *X* [Note (2)]	Hub Diam. Top, *A* [Note (3)]	Raised Face Diam., *R*	Drilling			Diam. of Bolt, in.	Minimum Fillet Radius, r_1
		WNF	Blind					Diam. of Bolt Circle	No. of Bolt Holes	Diam. of Bolt Hole, in.		
26	890	111.2	111.3	181	698	660.4	727	806.4	28	1¾	1⅝	13
28	950	115.9	115.9	190	752	711.2	784	863.6	28	1⅞	1¾	13
30	1 020	125.5	127.0	205	806	762.0	841	927.1	28	2	1⅞	13
32	1 085	130.2	134.9	216	860	812.8	895	984.2	28	2⅛	2	13
34	1 160	141.3	144.2	233	914	863.6	953	1 054.1	24	2⅜	2¼	14
36	1 215	146.1	150.9	243	968	914.4	1 010	1 104.9	28	2⅜	2¼	14
38	...	...	...	...	...	...	...	...	...	...	...	...
40	...	...	...	...	...	...	...	...	...	...	...	...
42	...	...	...	...	...	...	...	...	...	...	...	...
44	...	...	...	...	...	...	...	...	...	...	...	...
46	...	...	...	...	...	...	...	...	...	...	...	...
48	...	...	...	...	...	...	...	...	...	...	...	...
50	...	...	...	...	...	...	...	...	...	...	...	...
52	...	...	...	...	...	...	...	...	...	...	...	...
54	...	...	...	...	...	...	...	...	...	...	...	...
56	...	...	...	...	...	...	...	...	...	...	...	...
58	...	...	...	...	...	...	...	...	...	...	...	...
60	...	...	...	...	...	...	...	...	...	...	...	...

Drawing number: HY-CRN-900B-26-2014

Standard: ASME B16.47

Dimensions of Class 900 Series B Flanges

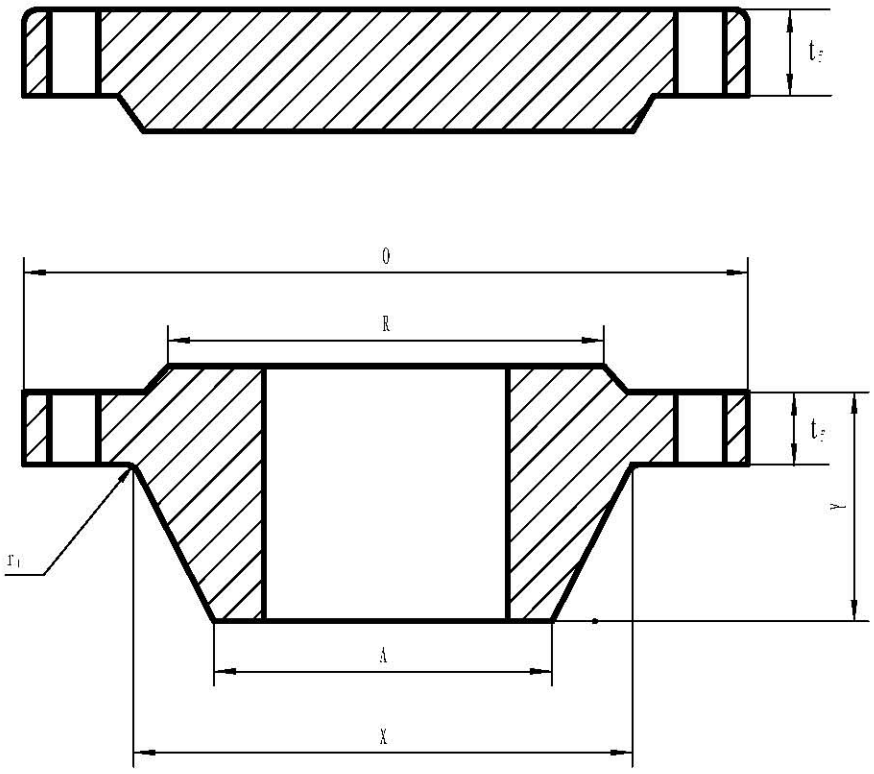

The preparation of units: Yangzhou Huayu pipe fittings Co., Ltd.

11. Dimensions of Class 900 Series B Flanges

Nominal Pipe Size	O.D. of Flange, *O*	Minimum Thickness of Flange, t_f [Note (1)]		Length Through Hub, *Y*	Diam. of Hub, *X* [Note (2)]	Hub Diam. Top, *A* [Note (3)]	Raised Face Diam., *R*	Drilling			Diam. of Bolt, in.	Minimum Fillet Radius, r_1
		WNF	Blind					Diam. of Bolt Circle	No. of Bolt Holes	Diam. of Bolt Hole, in.		
26	1 020	135.0	154.0	259	743	660.4	762	901.7	20	$2\frac{5}{8}$	$2\frac{1}{2}$	11
28	1 105	147.7	166.7	276	797	711.2	819	971.6	20	$2\frac{7}{8}$	$2\frac{3}{4}$	13
30	1 180	155.6	176.1	289	851	762.0	876	1 035.0	20	$3\frac{1}{8}$	3	13
32	1 240	160.4	186.0	303	908	812.8	927	1 092.2	20	$3\frac{1}{8}$	3	13
34	1 315	171.5	195.0	319	962	863.6	991	1 155.7	20	$3\frac{3}{8}$	$3\frac{1}{4}$	14
36	1 345	173.1	201.7	325	1 016	914.4	1 029	1 200.2	24	$3\frac{1}{8}$	3	14
38	...	...	...	...	...	...	...	...	...	...	...	...
40	...	...	...	...	...	...	...	...	...	...	...	...
42	...	...	...	...	...	...	...	...	...	...	...	...
44	...	...	...	...	...	...	...	...	...	...	...	...
46	...	...	...	...	...	...	...	...	...	...	...	...
48	...	...	...	...	...	...	...	...	...	...	...	...
50	...	...	...	...	...	...	...	...	...	...	...	...
52	...	...	...	...	...	...	...	...	...	...	...	...
54	...	...	...	...	...	...	...	...	...	...	...	...
56	...	...	...	...	...	...	...	...	...	...	...	...
58	...	...	...	...	...	...	...	...	...	...	...	...
60	...	...	...	...	...	...	...	...	...	...	...	...

BRIEF OF MATERIAL
材料简介

MATERIAL 材料	CHEMICAL ANALYSIS (%) 化学成分															MECHANICAL PROPERTY 机械性能		
	C 碳	Mn 锰	P 磷 ≤	S 硫 ≤	Si 硅	Cr 铬	Cu 铜	Mo 钼	Ni 镍	V 矾	N 氮	Ti 钛	Al 铝	Nb 铌	Others 其他	TS 抗拉强度 ≥(MPa)	YS 屈服强度 ≥（MPa)	E 延伸率 ≥ (%)
A 105	≤ 0. 35	0.60～1.05	0.035	0.040	0.10～0.35	≤ 0. 30	≤ 0. 40	≤ 0. 12	≤ 0. 40	≤ 0.08						485	250	30
A240 304	≤0.07	≤2.00	0.045	0.030	≤0.75	17.5～19.5			8.0～10.5		≤ 0.10					515	205	40
A240 304L	≤0.030	≤2.00	0.045	0.030	≤0.75	17.5～19.5			8.0～12.0		≤ 0.10					485	170	40
A182 F5	≤ 0. 15	0.30～0.60	0.030	0.030	≤ 0. 50	4.0～6.0		0.44～0.65	≤ 0. 50							485	275	20
A182 F9	≤ 0. 15	0.30～0.60	0.030	0.030	0.50～1.00	8.0～10.0		0.90～1.10								585	380	20
A182 F11 Class 1	0.05～0.15	0.30～0.60	0.030	0.030	0.50～1.00	1.00～1.50		0.44～0.65								415	205	20
A182 F11 Class 2	0.10～0.20	0.30～0.80	0.040	0.040	0.50～1.00	1.00～1.50		0.44～0.65								485	275	20
A182 F11 Class 3	0.10～0.20	0.30～0.80	0.040	0.040	0.50～1.00	1.00～1.50		0.44～0.65								515	310	20
A182 F12 Class 1	0.05～0.15	0.30～0.60	0.045	0.045	≤0.50	0.80～1.25		0.44～0.65								415	205	20
A182 F12 Class 2	0.10～0.20	0.30～0.80	0.040	0.040	0.10～0.60	0.80～1.25		0.44～0.65								485	275	20
A182 F22 Class 1	0.05～0.15	0.30～0.60	0.040	0.040	≤0.50	2.00～2.50		0.87～1.13								415	205	20
A182 F22 Class 3	0.05～0.15	0.30～0.60	0.040	0.040	≤0.50	2.00～2.50		0.87～1.13								515	310	20
A182 F304	≤0.08	≤2.00	0.045	0.030	≤1.0	18.0～20.0			8.0～11.0							515	205	30
A182 F304L	≤ 0.030	≤2.00	0.045	0.030	≤1.0	18.0～20.0			8.0～13.0							485	170	30
A182 F304H	0.04～0.10	≤2.00	0.045	0.030	≤1.0	18.0～20.0			8.0～11.0							515	205	30

ABSA Design Survey Note:
CRN 0B17376.52 applies only to flanges in full compliance with B16.5 or B16.47, including being of listed materials for those standards.

（To be continued 1）

MATERIAL 材料	CHEMICAL ANALYSIS (%) 化学成分															MECHANICAL PROPERTY 机械性能		
	C 碳	Mn 锰	P 磷 ≤	S 硫 ≤	Si 硅	Cr 铬	Cu 铜	Mo 钼	Ni 镍	V 矾	N 氮	Ti 钛	Al 铝	Nb 铌	Others 其他	TS 抗拉强度 ≥ (MPa)	YS 屈服强度 ≥ （MPa)	E 延伸率 ≥ (%)
A182 F316	≤0.08	≤2.00	0.045	0.030	≤1.0	16.0～18.0		2.00～3.00	10.0～14.0		≤0.10					515	205	30
A182 F316L	≤ 0.030	≤2.00	0.045	0.030	≤1.0	16.0～18.0		2.00～3.00	10.0～15.0		≤0.10					485	170	30
A182 F316H	0.04～0.10	≤2.00	0.045	0.030	≤1.0	16.0～18.0		2.00～3.00	10.0～14.0							515	205	30
A182 F317	≤0.08	≤2.00	0.045	0.030	≤1.0	18.0～20.0		3.00～4.00	11.0～15.0							515	205	30
A182 F317L	≤ 0.030	≤2.00	0.045	0.030	≤1.0	18.0～20.0		3.00～4.00	11.0～15.0							485	170	30
A182 F321	≤0.08	≤2.00	0.045	0.030	≤1.0	17.0～19.0			9.0～12.0			5C～0.70				515	205	30
A182 F321H	0.04～0.10	≤2.00	0.045	0.030	≤1.0	17.0～19.0			9.0～12.0			4C～0.70				515	205	30
A182 F347	≤0.08	≤2.00	0.045	0.030	≤1.0	17.0～20.0			9.0～13.0					10C～1.10		515	205	30
A182 F347H	0.04～0.10	≤2.00	0.045	0.030	≤1.0	17.0～20.0			9.0～13.0					8C～1.10		515	205	30
A182 F51 (S31803)	≤ 0.030	≤2.00	0.030	0.020	≤1.00	21.0～23.0		2.50～3.50	4.50～6.50		0.08～0.20					620	450	25
A182 F53 (S32750)	≤ 0.030	≤1.20	0.035	0.020	≤0.80	24.0～26.0	≤0.5	3.0～5.0	6.0～8.0		0.24～0.32					800[◇2]	550[◇2]	15
A182 F60 (S32205)	≤ 0.030	≤2.00	0.030	0.020	≤1.00	22.0～23.0		3.0～3.5	4.50～6.50		0.14～0.20					655	450	25
A182 F91	0.08～0.12	0.30～0.60	0.020	0.010	0.20～0.50	8.00～9.50		0.85～1.05	0.40	0.18～0.25	0.030～0.070	≤ 0.01	≤ 0.02	0.06～0.10	Zr≤0.01	620	415	20
A182 F92	0.07～0.13	0.30～0.60	0.020	0.010	≤0.50	8.50～9.50		0.30～0.60	0.40	0.15～0.25	0.030～0.070	≤ 0.01	≤ 0.02	0.04～0.09	1.5≤W≤2.0 Zr≤0.01 0.001≤B≤0.006	620	440	20

ABSA Design Survey Note:
CRN 0B17376.52 applies only to flanges in full compliance with B16.5 or B16.47, including being of listed materials for those standards.

（To be continued 2）

MATERIAL 材料	CHEMICAL ANALYSIS (%) 化学成分															MECHANICAL PROPERTY 机械性能		
	C 碳	Mn 锰	P 磷 ≤	S 硫 ≤	Si 硅	Cr 铬	Cu 铜	Mo 钼	Ni 镍	V 矾	N 氮	Ti 钛	Al 铝	Nb 铌	Others 其他	TS 抗拉强度 ≥ (MPa)	YS 屈服强度 ≥ （MPa)	E 延伸率 ≥ (%)
B564 UNS N04400	≤0.30	≤2.00		0.024	≤0.50		28.0～34.0		≥63.0						Fe≤2.5	483	172	35
B564 UNS N06625	≤0.10	≤0.50	0.015	0.015	≤0.50	20.0～23.0		8.0～10.0	≥58.0			≤0.40	≤0.40		Fe≤5.0 Nb+Ta(3.15~4.15)	827	414	in≤4：30
																758	345	4＜in≤12：25
B564 UNS N08825	≤0.05	≤1.00		0.003	≤0.50	19.5～23.5	1.5～3.0	2.5～3.5	38.0～46.0			0.6～1.2	≤0.20		Fe≥22.0	586	241	30
B-247 5083 -H112		0.40～1.00			≤0.40	0.05～0.25	≤0.10					≤ 0.15			Fe≤0.40 4.0≤Mg≤4.9 Zn≤0.25	40Ksi	18Ksi	16
A350 LF2 Class 1	≤0.30	0.60～1.35	0.035	0.040	0.15～0.30	≤0.30	≤0.40	≤0.12	≤0.40	≤0.03				≤0.02		485~655	250	30
A387 11Class 2 (UNS K11789)	0.04～0.17	0.35～0.73	0.025	0.035	0.44～0.86	0.94～1.56		0.40～0.70								415~585	240	22

ABSA Design Survey Note:
CRN 0B17376.52 applies only to flanges in full compliance with B16.5 or B16.47, including being of listed materials for those standards.

345 Carlingview Drive
Toronto, Ontario M9W 6N9
Tel.: 416.734.3300
Fax: 416.231.1626
Toll Free: 1.877.682.8772

www.tssa.org

December 19, 2024

ANRIC ENTERPRISES INC.
703 EVANS AVE UNIT 200
ETOBICOKE ON M9C 5E9

Workorder Type: Registration - Fitting(Conventional)
Workorder No: 14449448
Your Reference No.: OSX-2403-0135
Registered to: YANGZHOU HUAYU PIPE FITTING CO., LTD

Dear Catherine Williams,

Technical Standards and Safety Authority (TSSA) is pleased to inform you that your submission has been reviewed and registered as follows:

CRN : 0B17376.5R1
Main Design No.: Scope of CRN Renewal Registration
Expiry Date: Dec 19, 2034

Please be advised that a valid quality control system must be maintained for the fitting registration to remain valid until the expiry date.

The stamped copy of the approved registration and the invoice are mailed separately (There will be no hard copies for electronic submissions). Should you have any questions or require further assistance, please contact a Customer Service Advisor at 1.877.682.TSSA (8772) or e-mail customerservices@tssa.org. We will be happy to assist you. When contacting TSSA regarding this file, please refer to the Service Request number provided above.

Yours truly,

Charley Dong

Charley Dong
Engineer, BPV
Tel. : +1 416-734-3436
Email : cdong@tssa.org

Technical Standards and Safety Authority
345 Carlingview Drive
Toronto, Ontario M9W 6N9
www.tssa.org

Show facsimile of manufacturer's logo or trademark, as it will appear on the fitting, in the space below



STATUTORY DECLARATION
Registration of Fittings

I, Wang Xin
(Name and Position, e.g. President, Plant Manager, Chief Engineer)

of YANGZHOU HUAYU PIPE FITTING CO.,LTD.
(Name of Manufacturer)

Located at No.99,Baoying Street,Baoying County,Jiangsu Province,China 86-514-88290587 86-514-88265861
(Plant Address) *(Telephone No.)* *(Fax No.)*

☑ do solemnly declare that the fittings listed hereunder, which are subject to the ***Technical Standards and Safety Act***, Boilers and Pressure Vessels Regulation, comply with all of the requirements of
ASME B16.5, ASME B16.47
(Title of recognized North American Standard)
which specifies the dimensions, materials of construction, pressure/temperature ratings, identification marking the fittings and service;

☐ or are not covered by the provisions of a recognized North American standard and are therefore manufactured to comply with _____ as supported by the attached data which identifies the dimensions, material of construction, pressure/temperature ratings and the basis for such ratings, the marking of the fitting for identification and service.

I further declare that the manufacture of these fittings is controlled by a quality system meeting the requirements of ISO 9001:2015 which has been verified by the following authority, Huaxia Certification Center, Inc..
The items covered by this declaration, for which I seek registration, are category "B" type fittings. In support of this application, the following information and/or test data are attached as follows:
1. A copy of the current ISO certificate, 2. Scope of Registration, 3. Drawings, 4. Brief of material
(drawings, calculations, test reports, etc.)

Declared before me at Baoying **in the** People's Republic **of** China

the 10th **day of** September **AD 20** 24.

Commissioner for Oaths:

_____
(Printed name)

_____
(Signature)

wang Xin
(Signature of Declarer)

FOR OFFICE USE ONLY

To the best of my knowledge and belief, the application meets the requirements of the ***Technical Standards and Safety Act***, Boilers and Pressure Vessels Regulation, and CSA Standard B51 and is accepted for registration in Category B.

CRN: 0B17376.5R1

Registered by: Charley Dong

Dated: Dec 19,2024

NOTE: This registration expires on: Dec 19, 2034

Technical Standards and Safety Authority
Boilers and Pressure Vessels Safety Program

REGISTERED

C.R.N.: 0B17376.5R1

Signed: Charley Dong

Date: December 19, 2024.

**Information provided in this application is releasable under the Freedom of Information and Privacy Protection Act and may be disclosed upon request.*

PV 09553 (04/17)

公 证 书

(2024)苏宝证字第2007号

申请人：扬州华宇管件有限公司，统一社会信用代码：91321023718544699R，住所：宝应县宝应大道99号。

法定代表人：王鑫，男，1992年10月5日出生，公民身份号码：321023199210050411。

公证事项：签名

兹证明扬州华宇管件有限公司的法定代表人王鑫于2024年9月10日来到我处，在本公证员的面前，在前面的英文文件上签名。

中华人民共和国江苏省宝应县公证处

公证员 仇振华

2024年9月11日

IV65164892

NOTARIAL CERTIFICATE

(2024) S.B.Z.Zi, No. 2007

Applicant: YANGZHOU HUAYU PIPE FITTING CO., LTD., Unified Social Credit Code: 91321023718544699R, Address: No. 99, Baoying Street, Baoying County.

Legal Representative: Wang Xin, male, was born on October 5, 1992, ID No.: 321023199210050411.

Issue under notarization: Signature

This is to certify that Wang Xin, the legal representative of YANGZHOU HUAYU PIPE FITTING CO., LTD., came to our notary public office and signed the foregoing English document on September 10, 2024 in the presence of me, the notary public.

Notary: Qiu Zhenhua (Signature)

Baoying Notary Public Office,

Jiangsu Province (Seal)

The People's Republic of China

September 11, 2024

IV65164893

THIS IS PART OF CRN
0B17376.5R1
Technical Standards and Safety Authority
Boilers and Pressure Vessels Safety Program

Scope of CRN Renewal Registration

NO. 序号	DESCRIPTION 叙述	STANDARDS 标准	SIZE RANGE 尺寸范围	DRAWING NUMBER 图号
1	CL150 FLANGES	ASME B16.5	1/2" ~ 24"	HY-CRN-150FL-32-2014
2	CL300 FLANGES	ASME B16.5	1/2" ~ 24"	HY-CRN-300FL-33-2014
3	CL400 FLANGES	ASME B16.5	1/2" ~ 24"	HY-CRN-400FL-34-2014
4	CL600 FLANGES	ASME B16.5	1/2" ~ 24"	HY-CRN-600FL-35-2014
5	CL900 FLANGES	ASME B16.5	1/2" ~ 24"	HY-CRN-900FL-36-2014
6	CL1500 FLANGES	ASME B16.5	1/2" ~ 24"	HY-CRN-1500FL-37-2014
7	CL2500 FLANGES	ASME B16.5	1/2" ~ 12"	HY-CRN-2500FL-38-2014

Scope of CRN Renewal Registration

NO. 序号	DESCRIPTION 叙述	STANDARDS 标准	SIZE RANGE 尺寸范围	DRAWING NUMBER 图号
1	Class 150 Series A Flanges	ASME B16.47	26" ~ 60"	HY-CRN-150A-16-2014
2	Class 300 Series A Flanges	ASME B16.47	26" ~ 60"	HY-CRN-300A-17-2014
3	Class 400 Series A Flanges	ASME B16.47	26" ~ 60"	HY-CRN-400A-18-2014
4	Class 600 Series A Flanges	ASME B16.47	26" ~ 60"	HY-CRN-600A-19-2014
5	Class 900 Series A Flanges	ASME B16.47	26" ~ 60"	HY-CRN-900A-20-2014
6	Class 75 Series B Flanges	ASME B16.47	26" ~ 60"	HY-CRN-75B-21-2014
7	Class 150 Series B Flanges	ASME B16.47	26" ~ 60"	HY-CRN-150B-22-2014
8	Class 300 Series B Flanges	ASME B16.47	26" ~ 60"	HY-CRN-300B-23-2014
9	Class 400 Series B Flanges	ASME B16.47	26" ~ 60"	HY-CRN-400B-24-2014
10	Class 600 Series B Flanges	ASME B16.47	26" ~ 60"	HY-CRN-600B-25-2014
11	Class 900 Series B Flanges	ASME B16.47	26" ~ 60"	HY-CRN-900B-26-2014

UNIFORM STATUTORY DECLARATION FORM FOR THE REGISTRATION OF FITTING DESIGNS

New Brunswick | Nova Scotia | Prince Edward Island | Newfoundland and Labrador
Nunavut | Yukon | Northwest Territories

Manufacturers Name: YANGZHOU HUAYU PIPE FITTING CO.,LTD.

Manufacturers Address: No.99,Baoying Street,Baoying County,Jiangsu Province,China

Plant Locations: No.99,Baoying Street,Baoying County,Jiangsu Province,China

Category of Fittings to be registered. Circle one Category only

A Pipe fittings, including couplings, tees, elbows, Ys, plugs, unions, pipe caps, or reducers
(B) Flanges; all flanges
C Valves; all line valves
D Expansion joints, flexible connections, and hose assemblies; all types
E Strainers, filters, separators, and steam traps
F Measuring devices, including pressure gauges, level gauges, sight glasses, levels, or pressure transmitters
G Certified capacity-rated pressure relief devices acceptable as primary over pressure protection on boilers, pressure vessels, piping and fusible plugs
H Pressure retaining components that do not fall into one of the above categories

N Nuclear components: Class 1 ☐ Class 2 ☐ Class 3 ☐, (Meeting CNSC or ASME requirements)

Title of the Standard of Construction

ASME B16.5
ASME B16.47

Show Manufacturers Name, Trademark, or Logo as it will appear on the product

HUAYU

Type of Construction

Forged ☒ Welded ☒ Wrought ☒
Cast ☐ Other ☐
Describe other:

List of supporting documentation and identification of the actual items to be registered:

1. A copy of the current ISO certificate,
2. Scope of Registration,
3. Drawings;
4. Brief of material

Declaration:

I Wang Xin (see note 3) employed by Yangzhou Huayu Pipe Fitting Co.,Ltd. and being the person having full authority and responsibility for the quality of the end product do solemnly declare that the information contained in this form is true to the best of my knowledge represents the product for which registration is sought. The dimensions, materials of construction, pressure temperature ratings, and identification markings are in accordance with the herein named standards. I further declare that the manufacture of these fittings is regulated by a Quality Control Program which extends to each plant where fabrication occurs in whole or in part and has been verified by Huaxie Certification Center, Inc. as being suitable for that purpose and I make this solemn declaration conscientiously believing it to be true, and knowing that it is of the same force and effect as if made under oath.

Signature of Declarer: Wang Xin

Declared before me at Baoying

This 10th day of September A.D. 2024

Use this space for the Official Seal

Commissioner of Oaths

Or Notary Public: (sign) _____

(Affix Official seal to the right)

This space for Regulatory Authority use.

This registration must be revalidated after ten (10) years from the date of acceptance.

ORN: 0B17376.5 Rev.1

FID#: _____

Notes:

1. All Fittings shall be registered in the name of the Manufacturer.
2. Each Category shall be supported with two Statutory Declaration forms and one copy of supporting documentation.
3. The Declaration shall be made by the person having full authority and responsibility for the quality of the end product.
4. Quality Control programs shall be resubmitted for validation.

Scope: CRN renewal. Registration only includes sizes, material and dimensions as listed in B16.5 and B16.47. (DGallant)

11/2016

ACCEPTED
PROVINCE OF PRINCE EDWARD ISLAND
C.R.N.: 0B17376.5 Rev.1
DATE: JAN 17/25
SIGNED:
INSPECTION SERVICES SECTION
BOILER/PRESSURE VESSEL BRANCH

Secl 1.0 - Fittings Rev.2

UNIFORM STATUTORY DECLARATION FORM FOR THE REGISTRATION OF FITTING DESIGNS

New Brunswick | Nova Scotia | Prince Edward Island | Newfoundland and Labrador
Nunavut | Yukon | Northwest Territories

Manufacturers Name: YANGZHOU HUAYU PIPE FITTING CO.,LTD.	
Manufacturers Address: No.99,Baoying Street,Baoying County,Jiangsu Province,China	
Plant Locations: No.99,Baoying Street,Baoying County,Jiangsu Province,China	
Category of Fittings to be registered. Circle one Category only A Pipe fittings, including couplings, tees, elbows, Ys, plugs, unions, pipe caps, or reducers (B) Flanges: all flanges C Valves: all line valves D Expansion joints, flexible connections, and hose assemblies: all types E Strainers, filters, separators, and steam traps F Measuring devices, including pressure gauges, level gauges, sight glasses, levels, or pressure transmitters G Certified capacity-rated pressure relief devices acceptable as primary over pressure protection on boilers, pressure vessels, piping and fusible plugs H Pressure retaining components that do not fall into one of the above categories N Nuclear components: Class 1 ☐ Class 2 ☐ Class 3 ☐ , (Meeting CNSC or ASME requirements)	**Title of the Standard of Construction** ASME B16.5 ASME B16.47
Show Manufacturers Name, Trademark, or Logo as it will appear on the product HUAYU	**Type of Construction** Forged ☒ Welded ☒ Wrought ☒ Cast ☐ Other ☐ Describe other:
List of supporting documentation and identification of the actual items to be registered: 1. A copy of the current ISO certificate, 2. Scope of Registration, 3. Drawings, 4. Brief of material	

Declaration:

I Wang Xin (see note 3) employed by Yangzhou Huayu Pipe Fitting Co.,Ltd. and being the person having full authority and responsibility for the quality of the end product do solemnly declare that the information contained in this form is true to the best of my knowledge represents the product for which registration is sought. The dimensions, materials of construction, pressure temperature ratings, and identification markings are in accordance with the herein named standards. I further declare that the manufacture of these fittings is regulated by a Quality Control Program which extends to each plant where fabrication occurs in whole or in part and has been verified by Huaxia Certification Center, Inc. as being suitable for that purpose and I make this solemn declaration conscientiously believing it to be true, and knowing that it is of the same force and effect as if made under oath.

Signature of Declarer: Wang Xin

Declared before me at Baoying

This 10th day of September AD 2024

Use this space for the Official Seal

Commissioner of Oaths

Or Notary Public: (sign) _____

(Affix Official seal to the right)

This space for Regulatory Authority use

This registration must be revalidated after ten (10) years from the date of acceptance.

CRN: 0B17376.5 Rev.1

FID#: _____

Notes:

1. All Fittings shall be registered in the name of the Manufacturer.
2. Each Category shall be supported with two Statutory Declaration forms and one copy of supporting documentation.
3. The Declaration shall be made by the person having full authority and responsibility for the quality of the end product.
4. Quality Control programs shall be resubmitted for validation.

Scope: CRN renewal. Registration only includes 11/2016 sizes, material and dimensions as listed in B16.5 and B16.47. (DGallant)

BOILER PRESSURE VESSEL ACT & REGULATIONS
NOVA SCOTIA
Date Jan. 17/25
C.R.N. 0B17376.58Rev. 1
Dwg. as described
Signed _____
1 of 1 Part

Sect 1.0 - Fittings Rev.2

UNIFORM STATUTORY DECLARATION FORM FOR THE REGISTRATION OF FITTING DESIGNS

New Brunswick | Nova Scotia | Prince Edward Island | Newfoundland and Labrador
Nunavut | Yukon | Northwest Territories

Manufacturers Name: YANGZHOU HUAYU PIPE FITTING CO.,LTD.

Manufacturers Address: No.99,Baoying Street,Baoying County,Jiangsu Province,China

Plant Locations: No.99,Baoying Street,Baoying County,Jiangsu Province,China

Category of Fittings to be registered. Circle one Category only

A Pipe fittings, including couplings, tees, elbows, Ys, plugs, unions, pipe caps, or reducers
(B) Flanges: all flanges
C Valves: all line valves
D Expansion joints, flexible connections, and hose assemblies: all types
E Strainers, filters, separators, and steam traps
F Measuring devices, including pressure gauges, level gauges, sight glasses, levels, or pressure transmitters
G Certified capacity-rated pressure relief devices acceptable as primary over pressure protection on boilers, pressure vessels, piping and fusible plugs
H Pressure retaining components that do not fall into one of the above categories

N Nuclear components: Class 1 ☐ Class 2 ☐ Class 3 ☐ , (Meeting CNSC or ASME requirements)

Title of the Standard of Construction

ASME B16.5
ASME B16.47

Show Manufacturers Name, Trademark, or Logo as it will appear on the product

HUAYU

Type of Construction

Forged ■ Welded ■ Wrought ■
Cast □ Other □
Describe other:

List of supporting documentation and identification of the actual items to be registered:

1. A copy of the current ISO certificate,
2. Scope of Registration,
3. Drawings,
4. Brief of material

Declaration:

I Wang Xin (see note 3) employed by Yangzhou Huayu Pipe Fitting Co.,Ltd. and being the person having full authority and responsibility for the quality of the end product do solemnly declare that the information contained in this form is true to the best of my knowledge represents the product for which registration is sought. The dimensions, materials of construction, pressure temperature ratings, and identification markings are in accordance with the herein named standards. I further declare that the manufacture of these fittings is regulated by a Quality Control Program which extends to each plant where fabrication occurs in whole or in part and has been verified by Huaxia Certification Center, Inc. as being suitable for that purpose and I make this solemn declaration conscientiously believing it to be true, and knowing that it is of the same force and effect as if made under oath.

Signature of Declarer: Wang Xin

Declared before me at Baoying

This 10th day of September AD 2024

Commissioner of Oaths

Or Notary Public: (sign) _____

(Affix Official seal to the right)

Use this space for the Official Seal

New Nouveau Brunswick

DEPT OF JUSTICE PUBLIC SAFETY
BOILER & PRESSURE VESSEL ACT

REGISTRATION ONLY

CRN 0B17376.57Rev1

CHIEF BOILER INSPECTOR

DATE 1/17/25

Sect 1.0 - Fittings Rev.2

☐ BLRs ☐ PVs

☑ FITTINGS ☐ NUCLEAR COMPONENTS

This space for Regulatory Authority use.

This registration must be revalidated after ten (10) years from the date of acceptance.

CRN: 0B17376.5 Rev.1

FID#: _____

Notes:

1. All Fittings shall be registered in the name of the Manufacturer.
2. Each Category shall be supported with two Statutory Declaration forms and one copy of supporting documentation.
3. The Declaration shall be made by the person having full authority and responsibility for the quality of the end product.
4. Quality Control programs shall be resubmitted for validation.

Scope: CRN renewal. Registration only includes 11/2016 sizes, material and dimensions as listed in B16.5 and B16.47. (DGallant)

UNIFORM STATUTORY DECLARATION FORM FOR THE REGISTRATION OF FITTING DESIGNS

New Brunswick Nova Scotia Prince Edward Island Newfoundland and Labrador
Nunavut Yukon Northwest Territories

Manufacturers Name: YANGZHOU HUAYU PIPE FITTING CO ,LTD

Manufacturers Address: No.99 Baoying Street,Baoying County,Jiangsu Province,China

Plant Locations: No.99,Baoying Street,Baoying County,Jiangsu Province,China

Category of Fittings to be registered, Circle one Category only	Title of the Standard of Construction
A Pipe fittings, including couplings, tees, elbows, Ys, plugs, unions, pipe caps, or reducers (B) Flanges; all flanges C Valves; all line valves D Expansion joints, flexible connections, and hose assemblies: all types E Strainers, filters, separators, and steam traps F Measuring devices, including pressure gauges, level gauges, sight glasses levels, or pressure transmitters G Certified capacity-rated pressure relief devices acceptable as primary over pressure protection on boilers, pressure vessels, piping and fusible plugs H Pressure retain ng components that do not fall into one of the above categories N Nuclear components: Class 1 ☐ Class 2 ☐ Class 3 ☐ , (Meeting CNSC or ASME requirements)	ASME B16.5 ASME B16.47
Show Manufacturers Name, Trademark, or Logo as it will appear on the product HUAYU	**Type of Construction** Forged ☒ Welded ☒ Wrought ☒ Cast ☐ Other ☐ Describe other:

List of supporting documentation and identification of the actual items to be registered:

1. A copy of the current ISO certificate,
2. Scope of Registration,
3. Drawings,
4. Brief of material

Declaration:

I Weng Xin (see note 3) employed by Yangzhou Huayu Pipe Fitting Co.,Ltd. and being the person having full authority and responsibility for the quality of the end product do solemnly declare that the information contained in this form is true to the best of my knowledge represents the product for which registration is sought. The dimensions, materials of construction, pressure temperature ratings, and identification markings are in accordance with the herein named standards. I further declare that the manufacture of these fittings is regulated by a Quality Control Program which extends to each plant where fabrication occurs in whole or in part and has been verified by Huaxia Certification Center, Inc. as being suitable for that purpose and I make this solemn declaration conscientiously believing it to be true, and knowing that it is of the same force and effect as if made under oath.

Signature of Declarer: Weng Xin

Declared before me at Baoying

This 10th day of September AD 2024

Use this space for the Official Seal

Commissioner of Oaths

Or Notary Public: (sign) _____

(Affix Official seal to the right)

This space for Regulatory Authority use.

This registration must be revalidated after ten (10) years from the date of acceptance.

CRN: 0B17376.5 Rev.1

FID#: _____

Notes:

1. All Fittings shall be registered in the name of the Manufacturer.
2. Each Category shall be supported with two Statutory Declaration forms and one copy of supporting documentation.
3. The Declaration shall be made by the person having full authority and responsibility for the quality of the end product.
4. Quality Control programs shall be resubmitted for validation

Scope: CRN renewal. Registration only includes 11/2016 sizes, material and dimensions as listed in B16.5 and B16.47. (DGallant)

Newfoundland Labrador

Registered 0B17376.5 Rev 1

Date Jan 20.2025

Engineering and Inspection Services

Registered by: _____

UNDER THE AUTHORITY OF THE PUBLIC SAFETY ACT AND THE BOILER, PRESSURE VESSEL AND COMPRESSED GAS REGULATIONS

Sect 1.0 - Fittings Rev.2

UNIFORM STATUTORY DECLARATION FORM FOR THE REGISTRATION OF FITTING DESIGNS

New Brunswick | Nova Scotia | Prince Edward Island | Newfoundland and Labrador
Nunavut | Yukon | Northwest Territories

Manufacturers Name: YANGZHOU HUAYU PIPE FITTING CO.,LTD.

Manufacturers Address: No.99,Baoying Street,Baoying County,Jiangsu Province,China

Plant Locations: No.99,Baoying Street,Baoying County,Jiangsu Province,China

Category of Fittings to be registered. Circle one Category only	Title of the Standard of Construction
A Pipe fittings, including couplings, tees, elbows, Ys, plugs, unions, pipe caps, or reducers (B) Flanges: all flanges C Valves: all line valves D Expansion joints, flexible connections, and hose assemblies: all types E Strainers, filters, separators, and steam traps F Measuring devices, including pressure gauges, level gauges, sight glasses, levels, or pressure transmitters G Certified capacity-rated pressure relief devices acceptable as primary over pressure protection on boilers, pressure vessels, piping and fusible plugs H Pressure retaining components that do not fall into one of the above categories N Nuclear components: Class 1 ☐ Class 2 ☐ Class 3 ☐ , (Meeting CNSC or ASME requirements)	ASME B16.5 ASME B16.47
Show Manufacturers Name, Trademark, or Logo as it will appear on the product HUAYU	**Type of Construction** Forged ☒ Welded ☒ Wrought ☒ Cast ☐ Other ☐ Describe other:

List of supporting documentation and identification of the actual items to be registered:

1. A copy of the current ISO certificate,
2. Scope of Registration,
3. Drawings,
4. Brief of material

Declaration:

I Wang Xin (see note 3) employed by Yangzhou Huayu Pipe Fitting Co.,Ltd. and being the person having full authority and responsibility for the quality of the end product do solemnly declare that the information contained in this form is true to the best of my knowledge represents the product for which registration is sought. The dimensions, materials of construction, pressure temperature ratings, and identification markings are in accordance with the herein named standards. I further declare that the manufacture of these fittings is regulated by a Quality Control Program which extends to each plant where fabrication occurs in whole or in part and has been verified by Huaxia Certification Center, Inc. as being suitable for that purpose and I make this solemn declaration conscientiously believing it to be true, and knowing that it is of the same force and effect as if made under oath.

Signature of Declarer: Wang Xin

Declared before me at Baoying

This 10th day of September AD 2024

Use this space for the Official Seal

Commissioner of Oaths

Or Notary Public: (sign) _____

(Affix Official seal to the right)

This space for Regulatory Authority use.

This registration must be revalidated after ten (10) years from the date of acceptance.

CRN: 0B17376.5 Rev.1

FID#: _____

Notes:

1. All Fittings shall be registered in the name of the Manufacturer.
2. Each Category shall be supported with two Statutory Declaration forms and one copy of supporting documentation.
3. The Declaration shall be made by the person having full authority and responsibility for the quality of the end product.
4. Quality Control programs shall be resubmitted for validation.

Scope: CRN renewal. Registration only includes 11/2016 sizes, material and dimensions as listed in B16.5 and B16.47. (DGallant)

GOVERNMENT OF YUKON
BY
CRN 0B17376.5Y REV1
DATE 01/17/2025
BOILER BRANCH
Sect 1.0 - Fittings Rev.2

UNIFORM STATUTORY DECLARATION FORM FOR THE REGISTRATION OF FITTING DESIGNS

New Brunswick | Nova Scotia | Prince Edward Island | Newfoundland and Labrador
Nunavut | Yukon | Northwest Territories

Manufacturers Name: YANGZHOU HUAYU PIPE FITTING CO.,LTD.

Manufacturers Address: No.99,Baoying Street,Baoying County,Jiangsu Province,China

Plant Locations: No.99,Baoying Street,Baoying County,Jiangsu Province,China

Category of Fittings to be registered. Circle one Category only	Title of the Standard of Construction
A Pipe fittings, including couplings, tees, elbows, Ys, plugs, unions, pipe caps, or reducers (B) Flanges: all flanges C Valves: all line valves D Expansion joints, flexible connections, and hose assemblies: all types E Strainers, filters, separators, and steam traps F Measuring devices, including pressure gauges, level gauges, sight glasses, levels, or pressure transmitters G Certified capacity-rated pressure relief devices acceptable as primary over pressure protection on boilers, pressure vessels, piping and fusible plugs H Pressure retaining components that do not fall into one of the above categories N Nuclear components: Class 1 ☐ Class 2 ☐ Class 3 ☐ , (Meeting CNSC or ASME requirements)	ASME B16.5 ASME B16.47
Show Manufacturers Name, Trademark, or Logo as it will appear on the product HUAYU	**Type of Construction** Forged ■ Welded ■ Wrought ■ Cast □ Other □ Describe other:

List of supporting documentation and identification of the actual items to be registered:

1. A copy of the current ISO certificate,
2. Scope of Registration,
3. Drawings,
4. Brief of material

Declaration:

I Wang Xin (see note 3) employed by Yangzhou Huayu Pipe Fitting Co.,Ltd. and being the person having full authority and responsibility for the quality of the end product do solemnly declare that the information contained in this form is true to the best of my knowledge represents the product for which registration is sought. The dimensions, materials of construction, pressure temperature ratings, and identification markings are in accordance with the herein named standards. I further declare that the manufacture of these fittings is regulated by a Quality Control Program which extends to each plant where fabrication occurs in whole or in part and has been verified by Huaxia Certification Center, Inc. as being suitable for that purpose and I make this solemn declaration conscientiously believing it to be true, and knowing that it is of the same force and effect as if made under oath.

Signature of Declarer: Wang Xin

Declared before me at Baoying

This 10th day of September AD 2024

Use this space for the Official Seal

Commissioner of Oaths

Or Notary Public: (sign) _____

(Affix Official seal to the right)

This space for Regulatory Authority use.

This registration must be revalidated after ten (10) years from the date of acceptance.

CRN: 0B17376.5 Rev.1

FID#: _____

Notes:

1. All Fittings shall be registered in the name of the Manufacturer.
2. Each Category shall be supported with two Statutory Declaration forms and one copy of supporting documentation.
3. The Declaration shall be made by the person having full authority and responsibility for the quality of the end product.
4. Quality Control programs shall be resubmitted for validation.

Scope: CRN renewal. Registration only includes 11/2016 sizes, material and dimensions as listed in B16.5 and B16.47. (DGallant)

Northwest Territories
REGISTERED
UNDER THE AUTHORITY OF
THE BOILER AND PRESSURE
VESSEL ACT.
C.R.N 0B17376.5Rev1 Sect 1.0 Fittings Rev.2
SIGNED Matthias Mailman
DATE 1/17/25

UNIFORM STATUTORY DECLARATION FORM FOR THE REGISTRATION OF FITTING DESIGNS

New Brunswick Nova Scotia Prince Edward Island Newfoundland and Labrador
Nunavut Yukon Northwest Territories

Manufacturers Name: YANGZHOU HUAYU PIPE FITTING CO.,LTD.

Manufacturers Address: No.99,Baoying Street,Baoying County,Jiangsu Province,China

Plant Locations: No.99,Baoying Street,Baoying County,Jiangsu Province,China

Category of Fittings to be registered. Circle one Category only

A Pipe fittings, including couplings, tees, elbows, Ys, plugs, unions, pipe caps, or reducers
(B) Flanges: all flanges
C Valves: all line valves
D Expansion joints, flexible connections, and hose assemblies: all types
E Strainers, filters, seperators, and steam traps
F Measuring devices, including pressure gauges, level gauges, sight glasses, levels, or pressure transmitters
G Certified capacity-rated pressure relief devices acceptable as primary over pressure protection on boilers, pressure vessels, piping and fusible plugs
H Pressure retaining components that do not fall into one of the above categories

N Nuclear components: Class 1 ☐ Class 2 ☐ Class 3 ☐ , (Meeting CNSC or ASME requirements)

Title of the Standard of Construction

ASME B16.5
ASME B16.47

Show Manufacturers Name, Trademark, or Logo as it will appear on the product

HUAYU

Type of Construction

Forged ☒ Welded ☒ Wrought ☒
Cast ☐ Other ☐
Describe other:

List of supporting documentation and identification of the actual items to be registered:

1. A copy of the current ISO certificate,
2. Scope of Registration,
3. Drawings,
4. Brief of material

Declaration:

I Weng Xin (see note 3) employed by Yangzhou Huayu Pipe Fitting Co.,Ltd. and being the person having full authority and responsibility for the quality of the end product do solemnly declare that the information contained in this form is true to the best of my knowledge represents the product for which registration is sought. The dimensions, materials of construction, pressure temperature ratings, and identification markings are in accordance with the herein named standards. I further declare that the manufacture of these fittings is regulated by a Quality Control Program which extends to each plant where fabrication occurs in whole or in part and has been verified by Huaxia Certification Center, Inc. as being suitable for that purpose and I make this solemn declaration conscientiously believing it to be true, and knowing that it is of the same force and effect as if made under oath.

Signature of Declarer: Weng Xin

Declared before me at Baoying

This 10th day of September AD 2024

Commissioner of Oaths

Or Notary Public: (sign) _____

(Affix Official seal to the right)

Use this space for the Official Seal

This space for Regulatory Authority use.

This registration must be revalidated after ten (10) years from the date of acceptance.

CRN: 0B17376.5 Rev.1

FID#: _____

Notes:

1. All Fittings shall be registered in the name of the Manufacturer.
2. Each Category shall be supported with two Statutory Declaration forms and one copy of supporting documentation.
3. The Declaration shall be made by the person having full authority and responsibility for the quality of the end product.
4. Quality Control programs shall be resubmitted for validation.

Scope: CRN renewal. Registration only includes 11/2016 sizes, material and dimensions as listed in B16.5 and B16.47. (DGallant)

NUNAVUT
Boilers and Pressure Vessels Act

REGISTERED

CRN 0B17376.5N Rev.1

Date 01/17/2025

Signed _____

Chief Inspector

1.0 - Fittings Rev.2

Territorial Registration Fee

公 证 书

(2024)苏宝证字第2009号

申请人：扬州华宇管件有限公司，统一社会信用代码：91321023718544699R，住所：宝应县宝应大道99号。

法定代表人：王鑫，男，1992年10月5日出生，公民身份号码：321023199210050411。

公证事项：签名

兹证明扬州华宇管件有限公司的法定代表人王鑫于2024年9月10日来到我处，在本公证员的面前，在前面的英文文件上签名。

中华人民共和国江苏省宝应县公证处

公证员 仇根华

2024年9月11日

IV65164896

NOTARIAL CERTIFICATE

(2024) S.B.Z.Zi, No. 2009

Applicant: YANGZHOU HUAYU PIPE FITTING CO., LTD., Unified Social Credit Code: 91321023718544699R, Address: No. 99, Baoying Street, Baoying County.

Legal Representative: Wang Xin, male, was born on October 5, 1992, ID No.: 321023199210050411.

Issue under notarization: Signature

This is to certify that Wang Xin, the legal representative of YANGZHOU HUAYU PIPE FITTING CO., LTD., came to our notary public office and signed the foregoing English document on September 10, 2024 in the presence of me, the notary public.

Notary: Qiu Zhenhua (Signature)

Baoying Notary Public Office,

Jiangsu Province (Seal)

The People's Republic of China

September 11, 2024

IV65164897

As per CSA B51:24 and provincial jurisdiction, The Category B fittings manufactured by Yangzhou Huay Pipe Fitting Co. Ltd stated in the scope of registration are exempt from CRN registration in the province of British Columbia, Saskatchewan, Manitoba and Quebec.

Annex R (informative)
Synopsis of some exemptions in Canadian jurisdictions

Notes:

1) *This annex is not a mandatory part of this Standard.*
2) *It is the responsibility of users of this Standard to be aware that applicable local regulations can take precedence over the requirements of this Standard.*
3) *The user is also advised that this annex should be considered in the context of this Standard's Preface, in particular paragraphs relating to this Standard as a recommendatory document only, having the force of law only where it has been officially adopted by a Canadian jurisdiction, and that adoption does not necessarily mean that the Standard has been adopted unchanged.*
4) *It is possible that definitions, exemptions, and additional requirements are specified in provincial or territorial statutes or regulations that will differ from those specified in this Standard. For clarifications, interpretations, or other information related to statutes or regulations, the applicable AHJ should be consulted.*
5) *The provisions and requirements of a provincial or territorial Act prevail if there is a conflict between this Standard and the Act.*
6) *The conformity of pressure equipment with this Standard does not relieve the owner of the responsibility for the compliance in accordance with the applicable Act, statutes, or regulations of a Canadian jurisdiction.*
7) *The Acts and regulations are living documents and might be amended from the time of the publication of this Standard.*
8) *The following summary was subject to reasonable efforts to verify that it was valid on the date of the publication of this Standard.*
9) *It is the responsibility of users of this Standard to ensure they have access and be knowledgeable of the provisions and requirements of the latest Acts and regulation in the applicable Canadian Jurisdiction.*

R.1 Exemptions applicable in British Columbia

Categories	Exemptions
Power boilers	≤2 m² heating surface area
Steam heating boilers	≤3 m² heating surface area
Hot water heating boilers	≤3 m² heating surface area
Hot water heating boilers	Has no valves or other obstruction to prevent circulation of fluid between the boiler and an expansion tank that is fully vented to the atmosphere
Hot water heating boilers, steam heating boilers, potable water heaters, refrigeration plant, or pressure vessel plant	Does not contain toxic or flammable contents and is located in a building that contains only four or fewer self-contained residential units
Thermal fluid heaters	≤2 m² heating surface area for high-pressure thermal fluid boilers ≤3 m² heating surface area for low-pressure thermal fluid boilers
Potable water heaters	≤120 kW heat input
Boiler or pressure vessel	Subject to the jurisdiction of Transport Canada under the *Transportation of Dangerous Goods Act* and the *Canada Shipping Act*
Pressure vessels	Operating and with relief valve set pressure ≤103 kPa
Pressure vessels	Used for hydraulic purposes having an operating temperature of less than 82 °C if the primary design considerations are mechanical in nature

Copie exclusive pour membre de comité seulement. Toute diffusion est interdite.

Categories	Exemptions
	and stresses are derived from the functional requirements of the device rather than fluid pressure
Gas-insulated switchgear and control gear	Used for control of high voltage electricity
Water storage tanks	• Not equipped with a heating element • Water temperature ≤65 °C and pressure ≤1720 kPa or diameter ≤610 mm
Cushion tanks	Diameter ≤610 mm and working pressure ≤207 kPa
Pressure piping	Operating at and with a relief valve or valves set at ≤103 kPa
Pressure piping	A distribution main or service pipe as defined in the provincial *Gas Safety Regulation*
Pressure piping	≤NPS 3 or in a heating plant exempted from design registration
Pressure retaining component	An integral part of a rotating or reciprocating mechanical device if the primary design considerations or stresses of the device are derived from the functional requirements of the device exempted from design registration
Pressure piping	Domestic water piping systems used in buildings or other structures
Pressure piping	Medical gas piping systems
Pressure piping and fittings	External to the boiler proper in a low-temperature, low-pressure fluid plant or heating plant
Fittings	As per CSA B51
Fittings	Specific fittings in Categories A, B, C and G exempt from registration
Fired-heater pressure coils	N/A (fired heaters treated as either power boiler or thermal fluid boilers depending on heat medium)
Refrigeration	<5 kW prime mover nameplate rating
Refrigeration	Used for air conditioning or refrigerated compartments on railway cars, motor vehicles, motor-drawn vehicles, aircraft, or ships
Air or hydraulic brake systems	Systems subject to the *Motor Vehicle Safety Regulations* under the *Motor Vehicle Safety Act* (Canada)
Air or hydraulic brake systems and steering systems	For off-road vehicles
Penstocks	Exempt

Copie exclusive pour membre de comité seulement. Toute diffusion est interdite.

Categories	Exemptions
Pressure plant	That has one or more pressure vessels and the total volume of all the vessels does not exceed 42.5 L
Pressure equipment	Other than boilers, with a volume not exceeding 42.5 L, that is the subject of a research experiment in a research facility or is part of a temporary apparatus being used in a research experiment in a research facility
Gas systems equipment	Used to convey gas exclusively for fuel purposes and that is subject to the *Gas Code Regulation, AR 111/2010*
Gas-filled electrical switchgear or controlgear	Exempted
Equipment used for clothing care whether or not it is located at a dry-cleaning facility	• A steam chest not exceeding a volume of 42.5 L and operating at a steam pressure not exceeding 1035 kPa • A press not exceeding a volume of 42.5 L and operating at a steam pressure not exceeding 1035 kPa • A spray tank not exceeding a volume of 42.5 L

R.3 Exemptions applicable in Saskatchewan

Categories	Exemptions
Power boilers	A high-pressure boiler that has a heating surface with an area of 2 m^2 or less
Steam heating boilers	• A low-pressure boiler that has a heating surface with an area of 3 m^2 or less • Low-pressure boilers and associated heating system pressure vessels installed in a private dwelling designed to accommodate not more than three families
Hot water heating boilers	• a low-pressure boiler that has a heating surface with an area of 3 m^2 or less • low-pressure boilers and associated heating system pressure vessels installed in a private dwelling designed to accommodate not more than three families • a boiler that is used in connection with a hot liquid heating system that has no valves or other obstructions to free circulation between the boiler and an expansion tank that is fully vented to the atmosphere **Note:** *Also applies to water or water/glycol boilers and not just thermal fluid heaters.*
Thermal fluid heaters	A boiler that is used in connection with a hot liquid heating system that has no valves or other obstructions to free circulation between the boiler and an expansion tank that is fully vented to the atmosphere
Potable water heaters	Potable water heaters with an internal diameter greater than 610 mm that a) operate at a pressure not exceeding 1103 kPa; b) have a heat input not exceeding 58.67 kW; c) produce a water temperature not exceeding 99 °C; and d) have a water capacity not exceeding 454 L
All boilers	A boiler or pressure vessel to which the *Canada Shipping Act* applies or that

Copie exclusive pour membre de comité seulement. Toute diffusion est interdite.

Categories	Exemptions
switch gear	electrical high voltage switch gear or control gear
Hot water storage tanks	A pressure vessel that is used for the storage of hot water and has an internal diameter of 610 mm or less
Hydropneumatic tanks	Hydropneumatic tanks with a maximum diameter of 610 mm, a total volume of 450 L or less, and a maximum temperature of 65 °C or less
Expansion tank	A pressure vessel that is intended to be installed in a closed hot water heating system, has a working pressure of 207 kPa or less, and has an internal diameter of 610 mm or less
Pressure piping	• A pipeline as defined in *The Pipelines Act, 1998* • Pressure piping systems that a) contain hot water at a pressure of 1 103 kPa or less or at a temperature of 121 °C or less; and b) form part of a low-pressure boiler plant • Pressure piping systems that are not connected to or used in connection with a boiler or pressure vessel • Medical gas piping systems • Air piping with a diameter of 25.4 mm or less
Refrigeration	A refrigeration plant that has a capacity of 3 tonnes or less of refrigeration in 24 h

R.4 Exemptions applicable in Manitoba

Categories	Exemption
Power boilers	Act does not specify boiler types (see below)
Steam heating boilers	Act does not specify boiler types (see below)
Hot water heating boilers	Act does not specify boiler types (see below)
Thermal fluid heaters	No exemption listed in regulation therefore as per CSA B51
Potable water heaters	No exemption listed in regulation therefore as per CSA B51
All boilers	• <3 HP • Those that are used for heating a building designed and constructed as a private residence and intended to house not more than one family • Those that are used for heating a building used solely for residential purposes and containing not more than two separate apartments or suites
Pressure vessels	Does not include a) those that have a capacity of less than 1 1/2 ft^3; and b) those that are operated subject to a pressure of less than 103.4 kPa (15 psi)
Water storage tanks	No exemption listed in regulation therefore as per CSA B51
Cushion tanks	No exemption listed in regulation therefore as per CSA B51
Hydropneumatic tanks	Means a vessel at a pressure exceeding 103.4 kPa (15 psig); see pressure

Copie exclusive pour membre de comité seulement. Toute diffusion est interdite.

Categories	Exemption
	vessel exemption above
Hot water tank	Means a pressure vessel at a pressure exceeding 103.4 kPa (15 psig) and having a diameter of more than 610 mm (24 in)
Pressure piping	Piping volume less than 481 L (17 ft³) exempt from registration
Fittings	Categories A, B, C, and G category fittings exempt from registration
Fired-heater pressure coils	No exemptions listed in regulation therefore as per CSA B51
Refrigeration	See pressure vessel exemption above

R.5 Exemptions applicable in Ontario

Categories	Exemption
Power Boilers	A boiler having a heating surface of 0.93 m² (10 ft²) or less
Low-pressure boilers	A low-pressure boiler that has either a wetted heating surface of 2.79 m² (30 ft²) or less or a power rating of 30 kW or less
Thermal Fluid Heaters	No specific exemption for thermal fluid boilers
Potable Water heaters	No specific exemption for potable water heaters
All Boilers	A boiler that is used in connection with a hot liquid heating system that has no valves or other obstructions to free circulation between the boiler and an expansion tank that is vented freely to the atmosphere
Pressure vessels and piping systems	A pressure vessel, fitting or piping that contains a gas, vapour, or liquid at a maximum allowable working pressure of 103 kPa (15 psi) or less
Water storage tanks	Pressure vessel for domestic use that has an internal diameter of 610 mm (24 in) or less for the storage of hot water where the temperature does not exceed 100 °C (212 °F) and the heat input is 120 kW or less
Cushion tanks	A pressure vessel that has an internal diameter of 610 mm (24 in) or less that is connected in a liquid pumping system at a temperature that does not exceed 65 °C (150 °F) and contains air or an inert gas compressed to serve as a cushion
Hydropneumatic tanks	A pressure vessel that is used exclusively for hydraulic purposes at a temperature no greater than 65 °C (150 °F)
Pressure vessel used as water heater	No specific exemption
A pressure container	Pressure containers that form an integral part of or are a component of rotating or reciprocating mechanical devices including pumps, compressors, turbines, generators, engines, and hydraulic or pneumatic cylinders where the primary design considerations or stresses, or both, are derived from the functional requirements of the device
Pressure vessel	A pressure vessel having a capacity of 42.5 L (1.5 ft³) or less that is not a fitting
Pressure vessel	A pressure vessel having an internal diameter of 152 mm (6 in) or less

Copie exclusive pour membre de comité seulement. Toute diffusion est interdite.

R.6 Exemptions applicable in Québec

Categories	Exemption
All boilers	A boiler a) of the high-pressure kind, whose heating surface is 1 m² or less or whose power is 10 kW or less; b) of the steam, hot water or thermal fluid low-pressure kind, whose wet heating surface is 3 m² or less or whose power is 30 kW or less; c) whose pressure is 103 kPa or less, open circuit, and that has no valve between the boiler and the vent leading directly to the atmosphere; d) of the hot water kind, whose power is 60 kW or less, whose water temperature is 99 °C or less, and whose pressure is 1100 kPa or less; e) of the hot water or steam kind, that has the following characteristics: i) it has no steam drum or steam header; ii) the tubes and coils are not used to produce steam; iii) it is provided with manually operated nozzles or sprinklers that conduct the fluid directly into the atmosphere; iv) the tubes have an outside diameter not exceeding 25 mm and the pipes have a nominal diameter not exceeding 19 mm; v) its water volume does not exceed 23 L; vi) it is provided with a temperature control device that prevents the water temperature from exceeding 180 °C; and vii) it is provided with an overpressure safety relief device adjusted to and sealed at a pressure not exceeding the design pressure indicated on the boiler
Pressure vessels	• An expansion tank whose diameter is 610 mm or less and whose pressure is 205 kPa or less • A mobile pressure vessel not forming part of a pressure installation and used to transport gas or liquid under pressure, or used for the propulsion or operation of a vehicle, a vehicle component, or equipment
Hydropneumatic tanks	A hydropneumatic tank whose diameter is 610 mm or less, whose volume is 450 L or less and whose temperature is 65 °C or less
Hot water tank	• A hot water tank whose diameter is 610 mm or less • A hot water tank that is not provided with a power source and that contains water at a temperature of 99 °C or less
Pressure piping	• of the low-pressure kind, except thermal fluid piping connected to a boiler subject to this regulation • of a refrigeration system whose capacity is 11 kW or less • for fire protection • for compressed air, whose nominal diameter does not exceed 19 mm • used to convey pressurized gas or liquid for combustion purposes and that is subject to Chapter II, Gas, or Chapter VIII, Petroleum Equipment Installation, of the Construction Code (chapter B-1.1, r. 2)
Fittings	Despite the provisions regarding the registration of designs provided for in the Manufacturing Code, the designs and specifications for piping and accessories of categories A, B, and C, manufactured in accordance with a standard recognized at the national level by the American Society of Mechanical Engineers (ASME), are not required to be registered with the

Copie exclusive pour membre de comité seulement. Toute diffusion est interdite.

Categories	Exemption
	Board.
Refrigeration	This Regulation does not apply to a refrigeration system whose drive motor has a maximum rated power of 125 kW, is tested and certified by an approved test laboratory, and meets all the requirements of CSA B52, *Mechanical refrigeration code*. **Note:** *The way this should be understood is that no inspection is performed on such skids since these are already tested and certified as a complete unit. However, inspection is still performed on the refrigeration install (refrigeration piping, technical room, controls, safeties, exits) to verify conformance to CSA B52.*
Other exemptions	• A water heater whose diameter is 610 mm or less and whose power is 120 kW or less • A pressure vessel used as the enclosure for gas pressurized electric equipment and for any tank forming part thereof • Pressure equipment whose primary design data and primary constraints come from the equipment's operating conditions such as a pump, a compressor, a turbine, an engine, or a hydraulic cylinder • Well control pressure equipment used in the petroleum, gas, or geothermal prospection and exploitation industry, and in underground storage and intended to contain or control the well's pressure • Pressure equipment used for research and experimentation purposes in a research or teaching establishment; • A pressure vessel not provided with a direct power source and containing an incompressible liquid whose vapour pressure is 205 kPa or less in absolute pressure at the maximum operating temperature.

R.7 Exemptions applicable in New Brunswick

Categories	Exemption
Thermal fluid heaters	No exemption listed
All boilers	This Regulation does not apply to boilers or pressure vessels subject to inspection under the *Canada Shipping Act*, Chapter S-9 of the *Revised Statutes of Canada, 1970*, or to boilers or pressure vessels in a building occupied for residential purposes by not more than four families. Heat exchangers of the fin-tube type which have up to 10 m^2 (100 ft^2) of bare tube heating surface are exempt from shop inspection. A vessel in which steam is or may be generated or hot water produced under pressure, having a capacity of more than 0.085 m^3 (3 ft^3) and includes any pipe or fitting, prime mover, machinery, or other equipment attached to it or used in connection with it, but does not include a boiler used solely for heating purposes in a building occupied for residential purposes by not more than four families.
Pressure vessels	Act/Regulation refers to "boiler" and "pressure vessel" definitions (see Regulation for potentially applicable exemptions)
Hydropneumatic tanks	A pressure vessel having a diameter of more than 610 mm (24 in) and containing both liquid and air at a pressure exceeding 103 kPa (15 psig)

Copie exclusive pour membre de comité seulement. Toute diffusion est interdite.

 © 2024 Canadian Standards Association